Contents

BOSS/HERON

Instruction book

673791-GB-04/2002

EC Declaration of Conformity

Manufacturer,

HARDI INTERNATIONAL A/S
Helgeshøj Allé 38
DK 2630 Taastrup
DENMARK

Importer,

declare that the following product;

. . . . . .

. . . . . .

Adhere extra shipping package labels to inside cover.

A. was manufactured in conformity with the provisions in the COUNCIL DIRECTIVE of 14 June 1989 on mutual approximation of the laws of the Member States on the safety of machines (89/392/EEC as amended by directives 91/368/EEC and 93/368/EEC) with special reference to Annex 1 of the Directive on essential safety and health requirements in relation to the construction and manufacture of machines.

B. was manufactured in conformity with the standards current at that time that implements a harmonised standard in accordance with Article 5 (2) and other relevant standards.

Taastrup 03.04.2002

Lars Bentsen
Product Development Manager
HARDI INTERNATIONAL A/S

Operator safety

Watch for this symbol ⚠. It means WARNING, CAUTION, NOTE. Your safety is involved so be alert!
Note the following recommended precautions and safe operating practices.

- ⚠ Read and understand this instruction book before using the equipment. It is equally important that other operators of this equipment read and understand this book.
- ⚠ Local law may demand that the operator be certified to use spray equipment. Adhere to the law.
- ⚠ Pressure test with clean water prior to filling with chemicals.
- ⚠ Wear protective clothing.
- ⚠ Rinse and wash equipment after use and before servicing.
- ⚠ Depressurize equipment after use and before servicing.
- ⚠ Never service or repair the equipment whilst it is operating.
- ⚠ Disconnect electrical power before servicing.
- ⚠ Always replace all safety devices or shields immediately after servicing.
- ⚠ If an arc welder is used on the equipment or anything connected to the equipment, disconnect power leads before welding. Remove all inflammable or explosive material from the area.
- ⚠ Do not eat, drink or smoke whilst spraying or working with contaminated equipment.
- ⚠ Wash and change clothes after spraying.
- ⚠ Wash tools if they have become contaminated.
- ⚠ In case of poisoning, seek doctor or ambulance. Remember to identify chemicals used.
- ⚠ Keep children away from the equipment.
- ⚠ Do not attempt to enter the tank.
- ⚠ If any portion of this instruction book remains unclear after reading it, contact your HARDI dealer for further explanation before using the equipment.

We congratulate you for choosing a HARDI plant protection product. The reliability and efficiency of this product depend on your care. The first step is to carefully **read and pay attention** to this instruction book. It contains essential information for the efficient use and long life of this quality product.

As the instruction book covers all BOSS (BS) and HERON (HR) models, please pay attention to the paragraphs dealing with precisely your model. This book is to be read in conjunction with the "Spray Technique" book.

Description

The HARDI BS/HR sprayer is for the application of plant protection chemicals. They consist of pump, operating unit, frame with tank and spray boom.

The design of the diaphragm pump is simple, with easily accessible diaphragms and valves that ensures liquid does not contact the vital parts of the pump.

The tank, made of impact-proof and chemical resistant polyethylene, has a purposeful design with no sharp corners, for easy cleaning.

The BK operating unit consists of; pressure agitator valve, safety valve, main ON/OFF valve, pressure filter with pressure gauge, distribution valves with pressure equalization and HARDI-MATIC pressure control valve.

HARDI-MATIC ensures a constant volume per hectare of the liquid (l/ha) at varying speed in the same gear when the number of P.T.O. revolutions is between 300-600 r/min (800-1100 r/min for 1202/6.0 pumps).

The manually folded 6, 8 or 10 metre SB spray boom is fitted. It is fitted with a spring loaded breakaway at the pivots and TRIPLET SNAP-FIT nozzle bodies with COLOR TIP nozzles.

Identification plates
An identification plate fitted on the frame and pump is to indicate model, year of production with serial number and country of origin. If ordering spare parts, inform your dealer of these so the right model and version are described.

Function diagram

1a. Suction filter, BS 300
1b. Suction filter, BS/HR 800
2. Pump
3. Safety valve
4. Main ON/OFF valve
5. Pressure filter with pressure gauge
6. Distribution valves with pressure equalization and extra valve for spraygun
7. Pressure control valve with HARDI MATIC
8. Sprayer boom

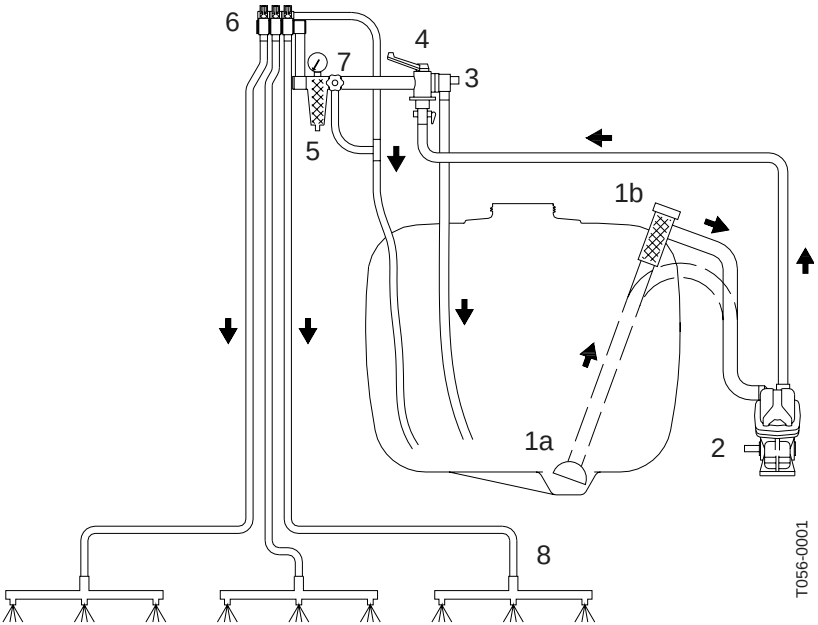

Connecting the sprayer

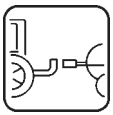

The BS 300 sprayer is designed for Cushman and Jacobsen tractors and fitting brackets must be used. For other tractors special hitching brackets must be manufactured.

The BS 800 sprayer is designed for TORO Workman 3200/3300.

The HR 800 sprayer can be connected to the tractor drawbar. The standard drawbar is forked. Alternatively, a drawbar with ball hitch can be supplied. Max driving speed for HR 800 is 25 km/h.

The standard pump is made for 540 r/min PTO. An alternative is model 1202 pump for 1000 r/min PTO.

Transmission shaft

Operator safety

To avoid accidents and personal injuries, note the following recommended precautions and safe operation practices.

Always STOP ENGINE before attaching the transmission shaft to tractor P.T.O. - most tractor P.T.O. shafts can be rotated by hand to facillitate spline alignement, when engine is stopped.

When attaching the shaft, make sure that the snap lock is FULLY ENGAGED - push and pull shaft until it locks.

WARNING: ROTATING TRANSMISSION SHAFTS WITHOUT PROTECTION GUARDS ARE FATAL.

Always keep protection guards and chains intact and make sure that it covers all rotating parts, including CV-joints at each end of the shaft. Do not use without protection guard.

Do not touch or stand on the transmission shaft when it is rotating - safety distance: 1.5 meter.

Prevent protection guards from rotating by attaching the chains allowing sufficient slack for turns.

Make sure that protection guards around tractor P.T.O. and implement shaft is intact.

Always STOP ENGINE and remove the ignition key before carrying out maintenance or repairs to the transmission shaft or implement.

Installation of transmission shaft

Initial installation of the shaft is done as follows:

1. Attach sprayer to tractor and set sprayer in the position with **shortest** distance between the tractor and sprayer pump P.T.O. shafts.
2. Stop engine and remove ignition key.

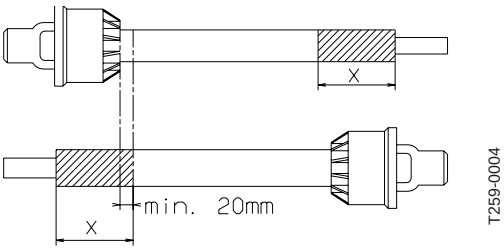

3. If transmission shaft must be shortened, the shaft is pulled apart. Fit the two shaft parts at tractor and sprayer pump and measure how much it is necesary to shorten the shaft. Mark the protection guards.

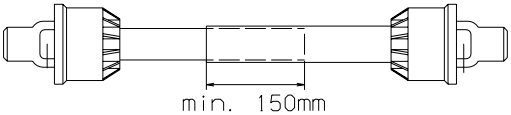

T259-0004

NOTE: The shaft must always have a minimum overlap 150 mm.

4. The two parts are shortened equally. Use a saw, and file the profiles afterwards to remove burrs.
5. Grease the profiles, and assemble male and female parts again.

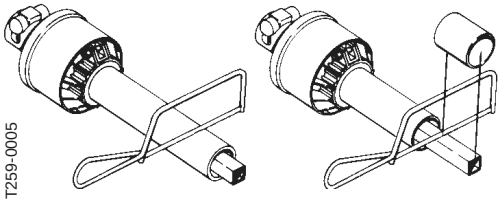

T259-0005

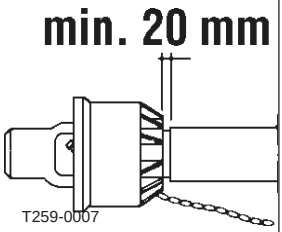

T259-0007

6. Fit the shaft to tractor and sprayer pump.
   NOTE: Female part towards tractor.
   Fit the chains to prevent the protection guards to rotate with the shaft.
7. To ensure long life of the transmission shaft, try to avoid working angles greater than 15°.
8. Transmission shafts with cone must be fitted by tightening the Allen screw to a torque of 40 Nm. Check again after 2 minutes use.

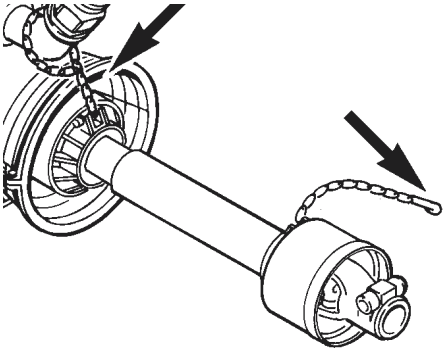

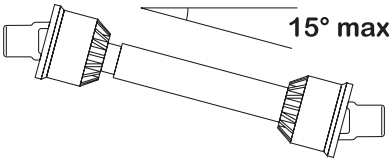

Mechanical remote control - HR only

The operating unit remote control is fitted at a convenient place in the tractor cabin.

Rear lights (if fitted)

Connect plug for rear lights to the tractors 7-poled socket and check that rear lights, stop lights and direction indicators work properly before driving anywhere.

The wiring is in ISO accordance. See section on Technical specifications.

Roadworthyness

When driving on public roads and other areas where the highway code applies, or areas where there are special rules and regulations for marking the lights on implements, you should observe these and equip implements accordingly.

Operating instructions

Filling the tank

It is recommended to use as clean water as possible for spraying purposes. Always fill water through the strainer basket to prevent foreign particles from entering the tank. An overhead tank can be used in order to obtain high filling capacity.

WARNING: Do not let the filling hose enter the tank. Keep it outside the tank, pointing towards the filling hole.
If the hose is lead into the tank and the water pressure drops at the water supply plant, chemicals may be syphoned back and contaminate the water supply lines, plant and well.

Unfolding and folding the boom

The boom is operated as follows:

1. Remove boom transport lock pins **A**.
2. Swing the boom down. When unfolding (or folding) the initial force to release the spring loaded breakaway will be higher than the actual unfolding/folding. **CAUTION**: The breakaway must be correctly tensioned and lubricated. (See section on Re-adjustment of the boom).
3. Unfold the outer sections. Do not let the outer sections fall into place.
4. Reverse procedure to fold.

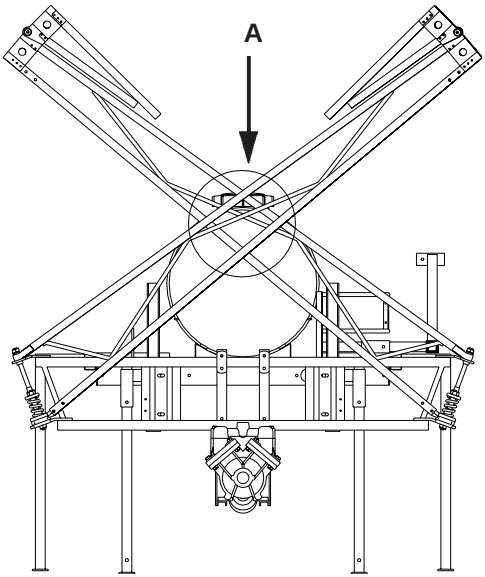

Boom height

Correct boom height is very important in order to obtain optimum distribution of the liquid (see “Spray Technique” book).

The boom height can be manually adjusted by removing the 4 bolts keeping the boom on the frame.
NOTE: This is best done by 2 persons or by means of a hoist.

Pulsation damper

The air pressure in the pulsation damper is factory preset at 2 bar to cover spray working pressures between 3 and 15 bar. When using spray pressures outside this range, the air pressure should be adjusted as shown in the diagram. The diagram is also embossed on the damper.

bar	bar
1.5 - 3	0 - 1
3 - 15	1 - 3

Adjustment of the BK controls

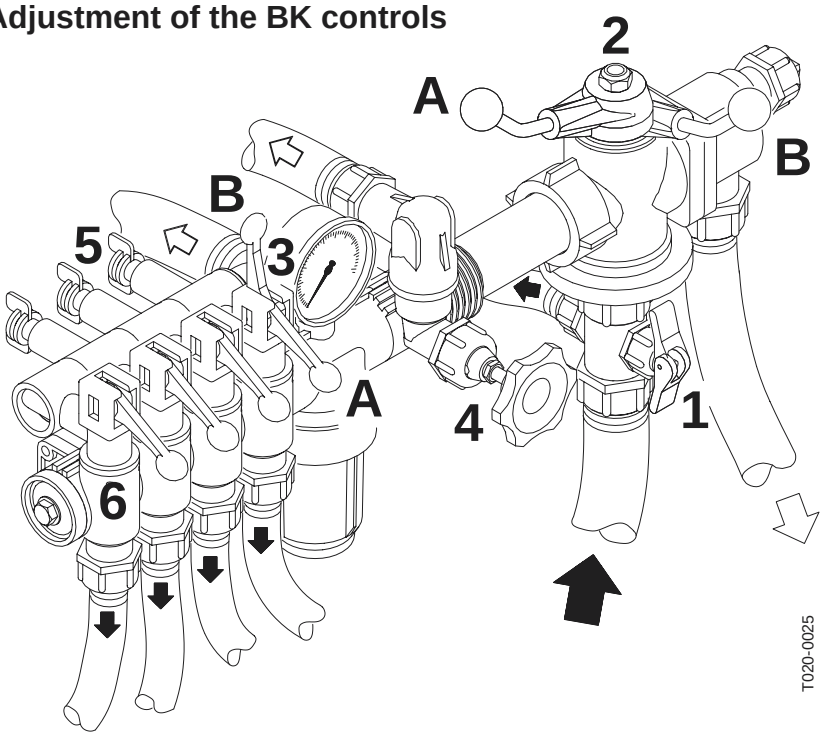

1. Choose the correct nozzle. Turn the TRIPLET nozzle bodies to the suitable nozzle for the spray purpose. Make sure that all nozzles are the same type and capacity. See “Spray Technique” book.
2. Open or close lever **1** depending on whether pressure agitation is required. (Remember pressure agitation takes 5% to 10% of pump output).
3. Turn main ON/OFF handle **2** to ON position **A**.
4. Set all hand levers **3** on the distribution valve to ON position **A**.
5. Turn the HARDI-MATIC valve **4** anti-clockwise to its extreme position.
6. Put the tractor in neutral and adjust the P.T.O. thereby the number of revolutions of the pump corresponding to the intended travelling speed.
   NOTE: For units with 540 r/min P.T.O., the revolutions must be kept between 300-600 r/min.
   NOTE: For units with 1000 r/min P.T.O., the revolutions must be kept between 800-1100 r/min.
7. Adjust the HARDI-MATIC valve **4** so that the pressure gauge indicates the recommended pressure.

ADJUSTMENT OF PRESSURE EQUALIZATION:

8. Place the first lever **3** on the distribution valve in OFF position **B**.
9. Turn the adjusting screw **5** until the pressure gauge again shows the same pressure.
10. Adjust the other sections of the distribution valve in the same way. Hereafter adjustment of pressure equalization will only be needed if you change to nozzles of other capacities.

OPERATING THE CONTROL UNIT WHILE DRIVING:

11. To stop the liquid flow to the boom turn the ON/OFF handle **2** to OFF position **B**. This returns the pump output to the tank through the return system. The diaphragm anti-drip valves ensure instantaneous closing of all nozzles.
    To stop the liquid flow to one or more boom sections, turn lever **3** of the distribution valve to OFF position **B** for the section to be closed. The pressure equalization ensures that the pressure does not rise in the sections which are to remain open.

OPERATING THE EXTRA VALVE

12. A spray gun can be connected to the control unit. When using this function, set hand levers **3** for the boom section to OFF position **B**. Screw the adjusting screws **5** in to prevent liquid returing to the tank. Set hand lever **6** to ON position **A**.

Operation of the tank drain valve (only 800 l tank)

To open: A
To close: B

Spray Technique - see separate book.
Optional Extras - see separate books.

Maintenance

In order to derive full benefit from the sprayer for many years the following few but important rules should be kept:

Cleaning the sprayer

Guidelines

Read the whole label of the chemical. Take note of any particular instructions regarding recommended protective clothing, deactivating agents, etc. Read the detergent and deactivating agent labels. If cleaning procedures are given, follow them closely.

Be familiar with local legislation regarding disposal of pesticides washings, mandatory decontamination methods, etc. Contact the appropriate body, eg. Dept of Agriculture.
Pesticide washings can usually be sprayed out on a soakaway. This is an area of ground that is not used for cropping. You must avoid seepage or run-off of residues into streams, water courses, ditches, wells, springs, etc. The washings from the cleaning area must not enter sewers. Drainage must lead to a soakaway.

Cleaning starts with the calibration, as a well calibrated sprayer will ensure the minimal amount of remaining spray liquid.
It is good practice to clean the sprayer immediately after use thereby rendering the sprayer safe and ready for the next pesticide application. This also prolongs the life of the components.

It is sometimes necessary to leave spray liquid in the tank for short periods, eg. overnight, or until the weather becomes suitable for spraying again. Unauthorized persons and animals must not have access to the sprayer under these circumstances.

If the product applied is corrosive, it is recommended to coat all metal parts of the sprayer before and after use with a suitable rust inhibitor.

Remember: Clean sprayers are safe sprayers.
Clean sprayers are ready for action.
Clean sprayers can not be damaged by pesticides and their solvents.

Cleaning

1. Dilute remaining spray liquid in the tank with at least 10 parts water and spray the liquid out in the field you have just sprayed.

NOTE: It is advisable to increase the forward speed (double if possible) and reduce the pressure. For S4110 nozzles, pressure may be reduced to 1.5 bar.

2. Select and use the appropriate protective clothing. Select detergent suitable for cleaning and suitable deactivating agents if necessary.
3. Rinse and clean sprayer and tractor externally. Use detergent if necessary.
4. Remove tank and suction filters and clean. Be careful not to damage the mesh. Replace suction filter top. Replace filters when the sprayer is completely clean.
5. With the pump running, rinse the inside of the tank. Remember the tank roof. Rinse and operate all components and any equipment that has been in contact with the chemical. Before opening the distribution valves and spraying the liquid out, decide whether this should be done in the field again or on the soakaway.
6. After spraying the liquid out, stop the pump and fill at least 1/5 of the tank with clean water. Note that some chemicals require the tank to be completely filled. Add appropriate detergent and/or deactivating agent, eg. Washing soda or Triple ammonia.
   NOTE: If a cleaning procedure is given on the chemical label, follow it closely.
7. Start the pump and operate all controls enabling the liquid to come in contact with all the components. Leave the distribution valves until last. Some detergents and deactivating agents work best if left in the tank for a short period. Check the label.
   If fitted the Self-Cleaning Filter can be flushed by removing the bypass hose from the bottom of the filter. Stop the pump and remove the hose. Start the pump for a few seconds to flush filter. Be careful not to loose the restrictor nozzle.
8. Drain the tank and let pump run dry. Rinse inside of tank, again letting the pump run dry.
9. Stop the pump. If the pesticides used have a tendency to block nozzles and filters, remove and clean them now. Check also for sediment on the pressure side of the safety valve for the Self-Cleaning Filter.
10. Replace all the filters and nozzles and store the sprayer. If, from previous experiences, it is noted that the solvents in the pesticide are particularly aggressive, store the sprayer with the tank lid open.
    NOTE: If the sprayer is cleaned with a high pressure cleaner we recommend lubrication of the entire machine.

Filters

Clean filters ensure :

- Sprayer components such as valves, diaphragms and operating unit are not hindered or damaged during operation.
- Nozzle blockages do not occur whilst spraying.
- Long life of pump. A blocked suction filter will result in pump cavitation.

Suction filter

The main filter protecting sprayer components is the suction filter. Check it regularly.
The BS 300 sprayer has a suction filter placed in the bottom of the tank.
The BS/HR 800 has a suction filter placed in the top of the tank.

BK Pressure filter / In Line Filters (if fitted)

The BK operating unit has an in-built pressure filter. Unscrew the filter bowl to inspect and clean the filter.

The boom may be equipped with In Line Filters. Unscrew the filter bowl to inspect and clean the filter.

Alternative filters are available. See section on Technical specifications - Filters and nozzles.

Lubrication

Recommended lubrication is shown in following table. Use ball bearing grease (lithium grease No. 2).

Note: If the sprayers are cleaned with a high pressure cleaner or fertilizer has been used, we recommend lubrication of all sections and all metal parts by means of corrosion protective oil.

5	Position on sprayer		Operation hours
	Oil		Page to find more information
	Grease		Winter protection/ off-season storage

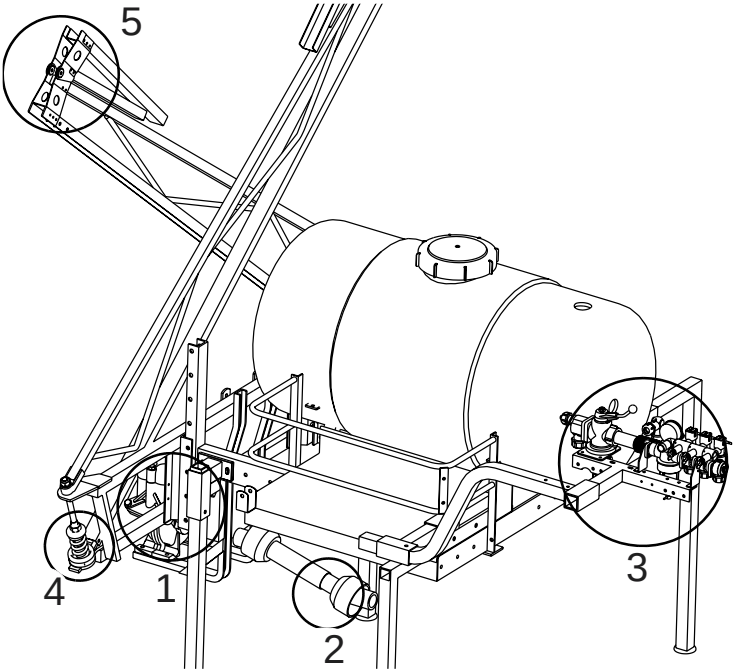

POS.					
1		X	40	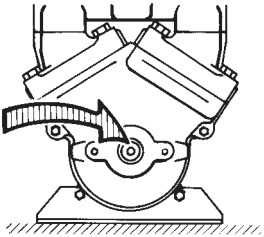	17
2 A A		X X	8 40	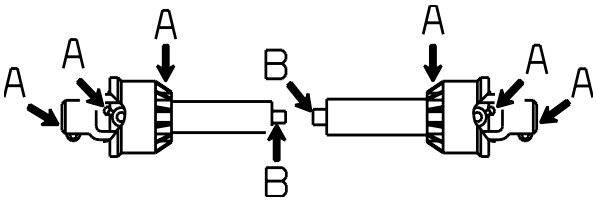	6
3	X		40	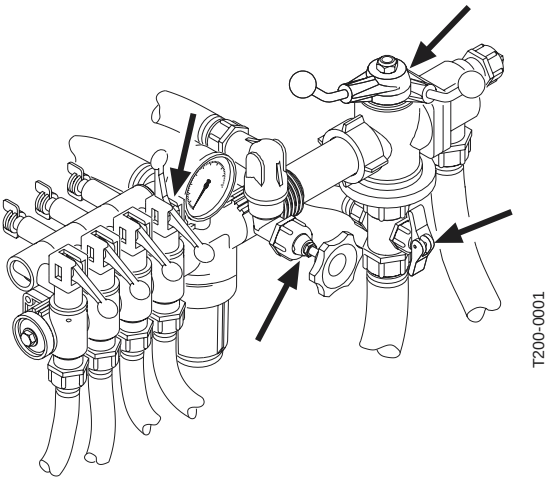	9

POS.					
4		X	40	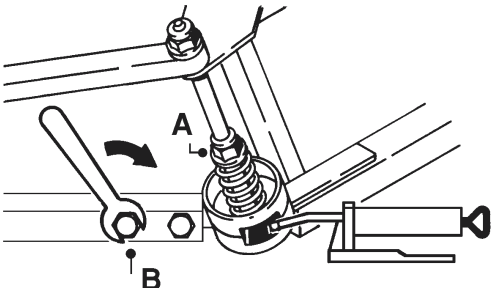	16
5	X		40	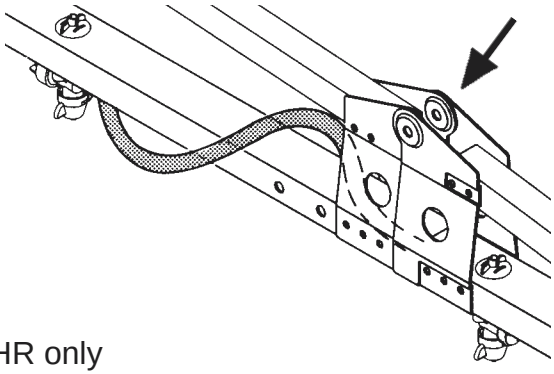 HR only	16
		X	1000 or once a year	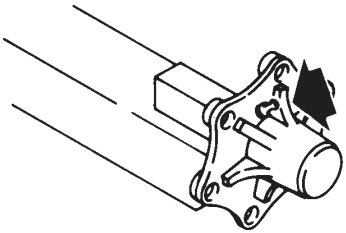	

Re-adjustment of the boom

After having used the sprayer for some days the boom should be adjusted according to the following instructions:
Carry adjustments out in the following order.

NOTE: Tractor and sprayer must be on level ground.
Sprayer must be lubricated. See section on Lubrication.

Boom breakaway

The function of the breakaway is to prevent or reduce boom damage if it should strike an object or the ground. If it is too tight, it will not function. If it is too loose, it will yaw (forward and back movement).

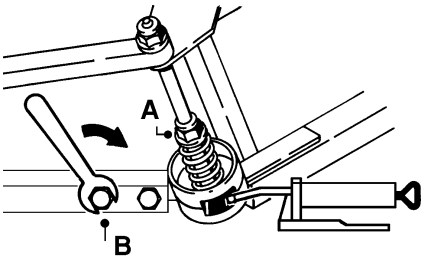

Slacken screw nut **A** to decrease breakaway resistance. Do not tighten excessively; better too loose than too tight. Again minor adjustments in the field may be necessary.
Ensure also channel bolts **B** are tight.

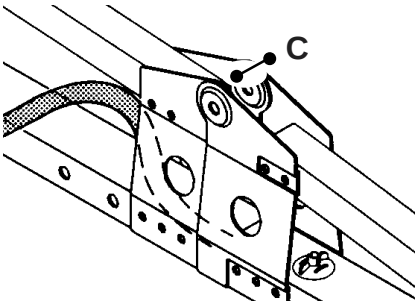

Outer section (8 and 10 m only)

The hinge should be firm. If too tight it is difficult to fold. To adjust, tighten or loosen nuts **C**.

Recommended tyre pressure (only HR)

The tyres should not run under-inflated. This only promotes instability and rapid wear.

Tyre size : 26" x 12"
Pressure :1.6 bar (24 p.s.i.)

The pressure is specified for a full loaded trailer.
Remember it is easier to let off a little pressure for a specific use than to re-inflate a tyre in mid-field.

Wheel nuts and bearings (only HR)

Check wheel nut tension after the first 8 working hours, hereafter every 50 hours.

Check roller bearing slack after the first 8 hours and 50 hours. Thereafter every 100 hours.

If necessary, adjust as follows

1. Jack wheel up. It is best to remove the wheel.
2. Remove hub cap **A** and split pin **B**.
3. Shaft nut **C** is tightened until slight rotation resistance of drum is noted.
4. Now loosen shaft nut until first split pin hole is visible.
5. Insert split pin and replace hub cap.

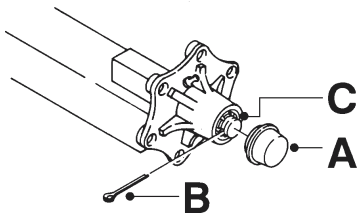

After 1000 hours or once a year, the axle bearings are greased.

Changing of valves and diaphragms

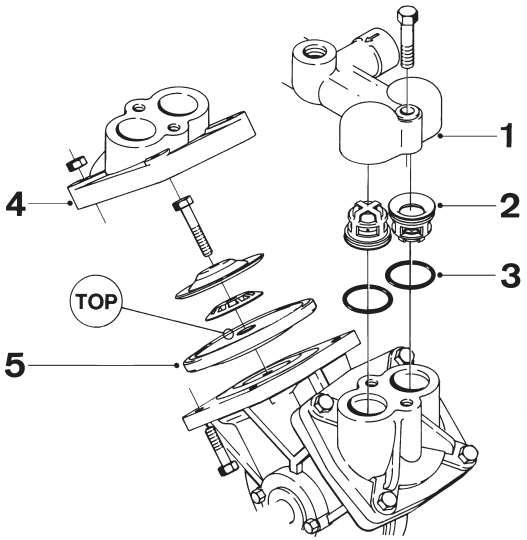

Valves

Remove valve cover **1**. Before changing the valves **2** note their orientation so they are replaced correctly.
It is recommended to use new gaskets **3** when changing or checking the valves.

Diaphragms

Remove the diaphragm cover **4**. The diaphragm **5** may then be changed. If fluids have reached the crankcase, re-grease the pump thoroughly. Check also the drain hole at the bottom of the pump is not blocked. Reassemble with the following torque setting.

Pump Model	Valve cover Nm	Diaphragm cover Nm	Diaphragm bolt Nm
1302	45	50	25
1202	70	70	60

1 Nm = 0.74 ft-lb

Changing the ball seat in operating unit

If the main ON/OFF valve does not seal properly (dripping nozzles when main ON/OFF valve is closed), the ball and seat should be checked.

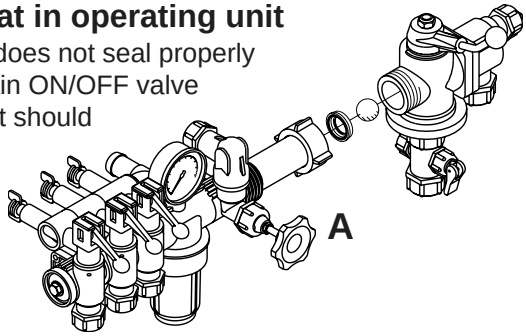

Remove the 2 bolts fixing the main ON/OFF-pressure valve unit to the bracket, unscrew the union nut **A** and pull the valve away from the distribution valves.

Check the ball for sharp edges and scratches, and check the ball seat for cracks and wear - replace if necessary.

Nozzle tubes and fittings

Poor seals are usually caused by;

- missing O-rings or gaskets
- damaged or incorrectly seated O-rings
- dry or deformed O-rings or gaskets
- foreign bodies

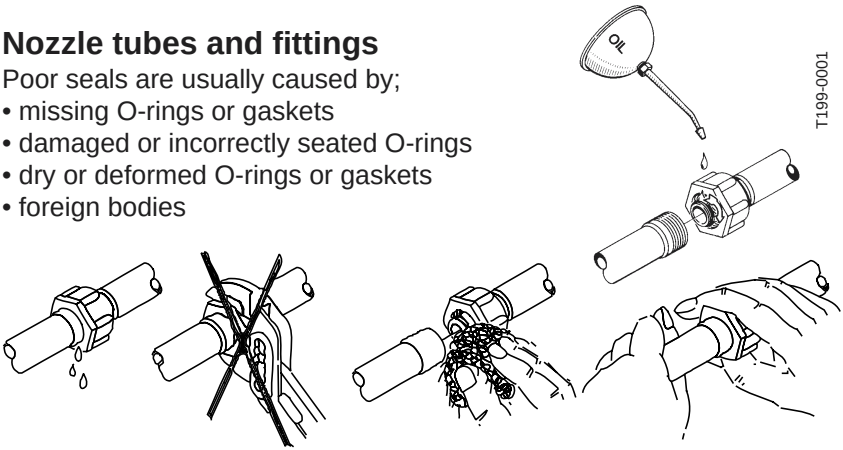

Therefore, in case of leaks: **DO NOT** overtighten. Disassemble, check condition and position of O-ring or gasket, clean lubricate and reassemble. The O-ring should be lubricated **ALL THE WAY ROUND** before fitting on to the nozzle tube.

For **radial** connections only hand tighten.

For **axial** connections, a little mechanical leverage may be used.

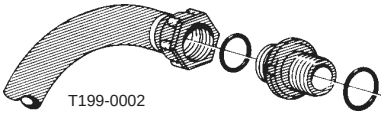

Off-season storage

When the spraying season is over you should devote some extra time to the sprayer before it is stored.

Hoses

Check that none of the hoses are cut or have sharp bends.
A leaky hose can give an annoying delay in the middle of the spraying job. Therefore check all the hoses and replace them if there is any doubt about the durability.

Paint

Some chemicals are very rough on paints. It is therefore well advised to remove rust, if any, and then touch up the paint.

Tank

Check that no chemical residues are left from the last spraying. Chemical residues must not be left in the tank for a long time. It will reduce the life of the tank. See section on Cleaning the sprayer.

Transmission shaft

Check that the shaft fullfils its security purpose, e.g. that shields and protective tubes are intact.

Anti-freeze precaution

If the sprayer is not stored in a frost free place you should take the following precautions: Put at least 10 litres of 33% anti-freeze mixture in the tank and let the pump run a few minutes so that the entire system including spray hose are filled. The anti-freeze solution also hinders the O-rings and gaskets from drying out.
Remove the glycerine filled pressure gauge and store it frost free in vertical position.

Operational problems

In cases where breakdowns have occurred the same factors always seem to come into play:

- Minor leaks on the suction side of the pump will reduce the pump capacity or stop the suction completely.
- A clogged suction filter will hinder or prevent suction so that the pump does not operate satisfactorily.
- Clogged up pressure filters will result in increasing pressure at the pressure gauge but lower pressure at the nozzles.
- Foreign bodies stuck in the pump valves with the result that these cannot close tightly against the valve seat. This reduces pump efficiency.
- Poorly reassembled pumps, especially diaphragm covers will allow the pump to suck air resulting in reduced or no capacity.

Therefore ALWAYS check

1. That suction, pressure and nozzle filters are clean.
2. Hoses for leaks and cracks, paying particular attention to suction hoses.
3. Gaskets and O-rings are present and in good condition.
4. Pressure gauge is in good working order. Correct dosage depends on it.
5. Operating unit functions properly. Use clean water to check.

Fault	Probable cause	Control / remedy
Liquid system		
No spray from boom when turned on.	Air leak on suction.	Check if red suction lid/O-ring are sealing.
		Check suction tube and fittings.
		Check tightness of pump diaphragm and valve covers.
	Air in system.	Fill suction hose with water for initial prime.
	Suction/pressure filters clogged.	Clean filters.
		Check yellow suction pipe is not obstructed or placed too near the tank bottom (only 800 l tank).

Fault	Probable cause	Control / remedy
Lack of pressure.	Incorrect assembly.	Agitation nozzles not fitted.
		Too little distance between yellow suction pipe and tank bottom (only 800 l tank).
	Pump valves blocked or worn.	Check for obstructions and wear.
	Defect pressure gauge.	Check for dirt at inlet of gauge.
Pressure dropping.	Filters clogging.	Clean all filters. Fill with cleaner water.
		If using powders, make sure agitation is on.
	Nozzles worn.	Check flow rate and replace nozzles if it exceeds 10%.
	Tank is airtight.	Check vent is clear.
	Sucking air towards end of tank load.	Exessive agitation, turn off.
		Returns inside tank need relocation.
Pressure increasing	Pressure filters beginging to clog.	Clean all filters.
	Agitation nozzles clogged.	Check by turning agitation off/on.
Formation of foam.	Air is being sucked into system.	Check tightness / gaskets / O-rings of all fittings on suction side.
	Excessive liquid agitation.	Turn agitation off. Reduce pump r/min.
		Ensure returns inside tank are present.
		Use foam damping addative.
Liquid leaks from bottom of pump.	Damaged diaphragm.	Replace. See Changing of valves and diaghragms.

Technical specifications

Measure and weight

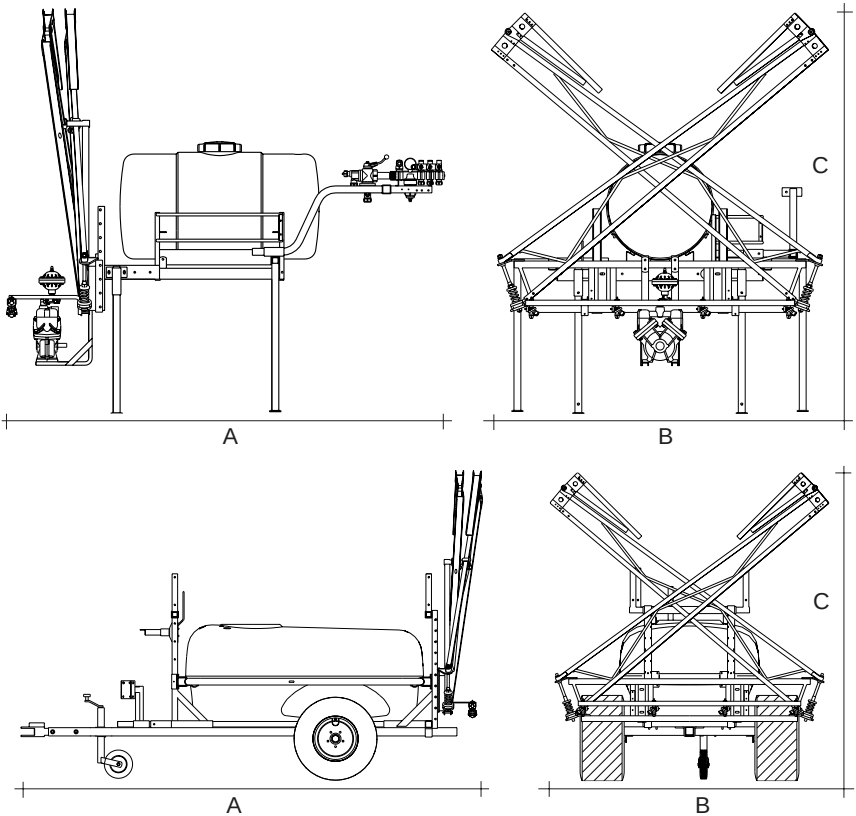

Model	Boom width m	Pressure max. bar	Dimension A x B x C
BS 300	6 SB	15	265 x 195 x 192/225
BS 300	8 SB	15	265 x 195 x 237/270
HR 800	6 SB	15	310/350 x 195 x 180/230
HR 800	8 SB	15	310/350 x 195 x 225/275

Weight:
BS 300: from 172 - 213.5 kg depending on model
BS 800: from 234 - 256 kg depending on model

Pump power consumption and capacity

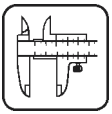

1202/6.0	r/min									
	400		500		600		800		1000	
bar	l/min	kW	l/min	kW	l/min	kW	l/min	kW	l/min	kW
0	46		58		72		95		112	
5	31		39		47		62		77	
10	30		37		44		59		73	
15	28		35		42		55		69	
Rotation per min.		r/min	Capacity			l/min	Suction height			0,0 m
Power consumption		kW	Max. pressure			15bar	Weight			24,0 kg

1202/9.0	r/min									
	300		400		500		540		600	
bar	l/min	kW	l/min	kW	l/min	kW	l/min	kW	l/min	kW
0	56	0,91	72	1,28	93	1,52	99	1,63	112	1,79
5	40	1,11	53	1,36	66	1,60	71	1,71	79	1,86
10	38	1,38	52	1,74	64	1,79	69	1,87	77	2,07
15	37	1,60	50	1,97	62	2,32	67	2,48	75	2,76
Rotation per min.		r/min	Capacity			l/min	Suction height			0,0 m
Power consumption		kW	Max. pressure			15bar	Weight			24,0 kg

1302/9.0	r/min									
	300		400		500		540		600	
bar	l/min	kW	l/min	kW	l/min	kW	l/min	kW	l/min	kW
0	63	0,90	84	1,19	103	1,51	114	1,61	125	1,80
5	58	0,94	79	1,29	96	1,61	105	1,75	116	1,93
10	56	1,30	76	1,80	94	2,30	101	2,48	111	2,72
15	55	1,80	74	2,22	93	2,92	99	3,18	109	3,54
Rotation per min.		r/min	Capacity			l/min	Suction height			0,0 m
Power consumption		kW	Max. pressure			15bar	Weight			35,0 kg

Rear lights connection diagram

Position	Wire colour
1. LH direction indicator	Yellow
2. Free	Blue
3. Frame	White
4. RH direction indicator	Green
5. RH rear position lamp	Brown
6. Stop lamps	Red
7. LH rear position lamp	Black

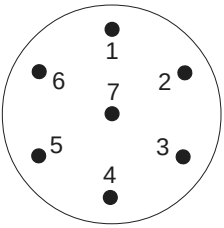

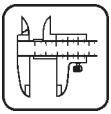

Filters and nozzles

30 mesh suction filter
(only BS/ HR 800)
50 mesh operating
unit/pressure filter
50 mesh nozzle filters

Mesh	30 G	50 B	80 R	100 Y
mm	0.58	0.30	0.18	0.15

G= Green B= Blue R= Red Y= Yellow

Temperature and pressure ranges

Operating temperature range : 2° to 40° C.
Operating pressure for safety valve : 15 bar

Materials and recycling

Tank HDPE
Hoses PVC
Fittings PA

Disposal of the sprayer

When the equipment has completed its working life, it must be thoroughly cleaned. The tank, hose and synthetic fittings can be incinerated at an authorized disposal plant. The metallic parts can be scrapped. Always follow local legislation regarding disposal.

Pictorial symbols


Description


Service/adjustment


Winter storage


Function


Liquid flow


Operational problems


Connection

Pressure


Technical specifications


Warning


Cleaning


EC Declaration of Conformity


Operating


Lubrication

Assembly

Preassembly information

The sprayer is supplied ex-works in shipping packages (SP). Number of SP's per sprayer varies depending on model.
As this covers all BS/HR models, please note the fittings covering exactly your model.

NOTE: Removal of the plastic bag covering the tank is easiest done before assembly.
Some components are shipped within the tank. Check inside.
To verify connection of hoses, a function diagram is included on the last page.

Packaging information

Materials used for packaging are environmentally compatible. They can be safely deposited or they can be burnt in an incinerator.

Recycling

Cardboard: Can recycle up to 99% and therefore should be put into the waste collection system.
Polystyrene foam: Can be recycled. Fluorocarbons (CFC) not used in foam production. Polyethylene: Can be recycled.

NOTE: Use O-rings where indicated. Lubricate them with non-mineral lubricant (silicon oil) before assembly. Where O-rings are not indicated, use sealing tape.

Check that all shipping packages are present.

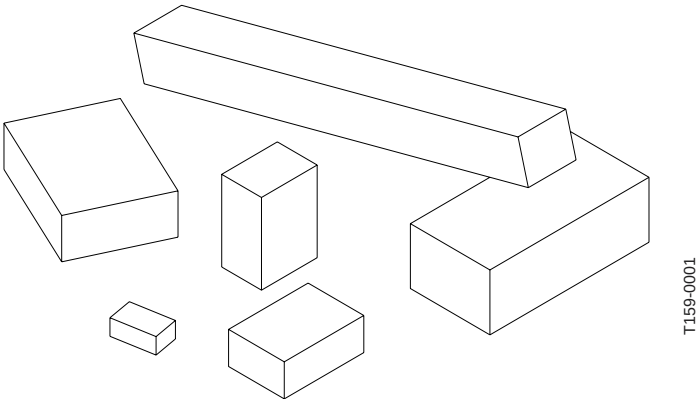

BS 300 sprayer

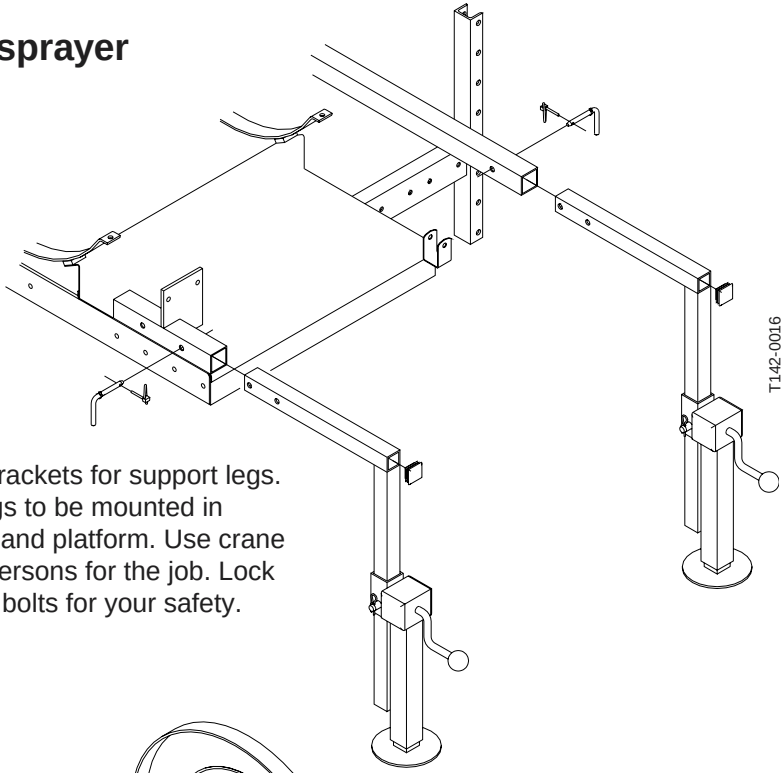

1. Fit rear brackets for support legs. The 4 legs to be mounted in brackets and platform. Use crane or be 2 persons for the job. Lock with split bolts for your safety.

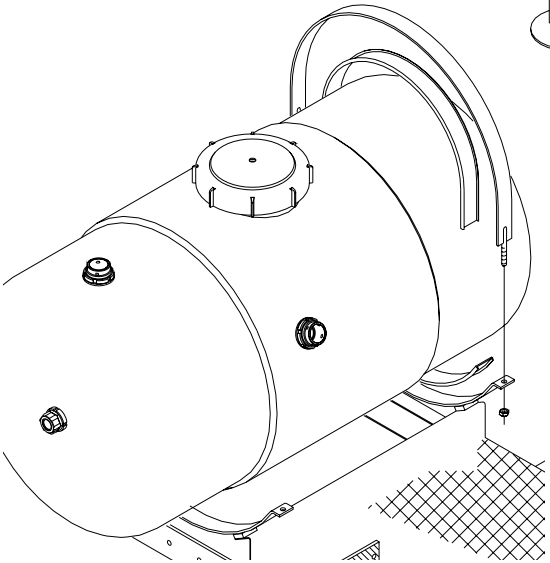

2. Remove plastic protection from the tank. Use profile strips before the tank is placed in its frame. Strips and tank are fixed with tank straps. Remember the socket in one end of the tank must point forward.

3. Fit straight bracket in right hand side of platform and then S-shaped bracket and operating unit arm.

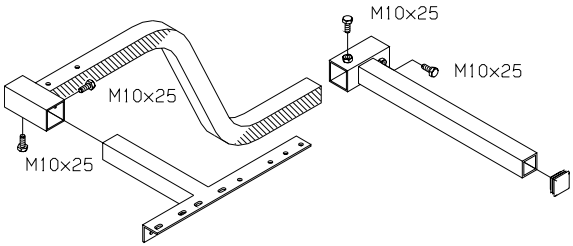

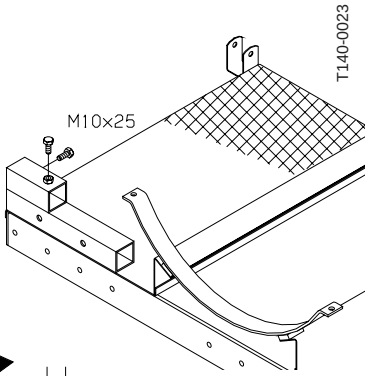

4. Main ON/OFF handle **1B** is closed. Put ball into the handle and turn it to working position **1A**, whereby the ball disappears into the operating unit. Fit ball seat on distr-ibution valves which are tightened to the main ON/OFF part. Fit the operating unit with snap screws and plastic nuts.

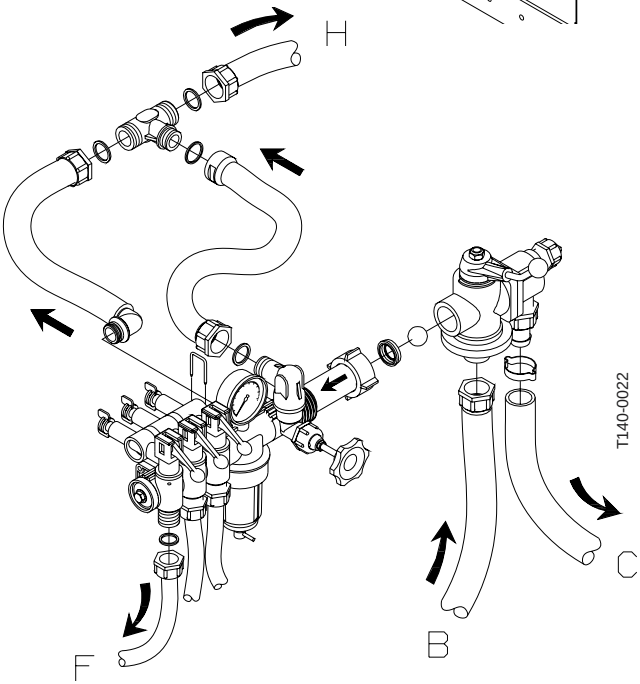

5. Screw pressure gauge on with teflon tape to filter body . Do not overtighten. See back of gauge. Remember to pierce casing after installation.

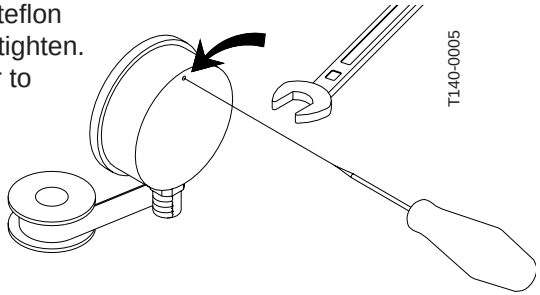

6. Fit angle bracket to frame and fit central section to angle bracket. Clamp and nozzle screen are placed on central section. Mount 6 m SB outer section or 8 m SB intermediate/outer sections. Be careful when folding the boom for the first time (see section on Re-adjustment of the boom).

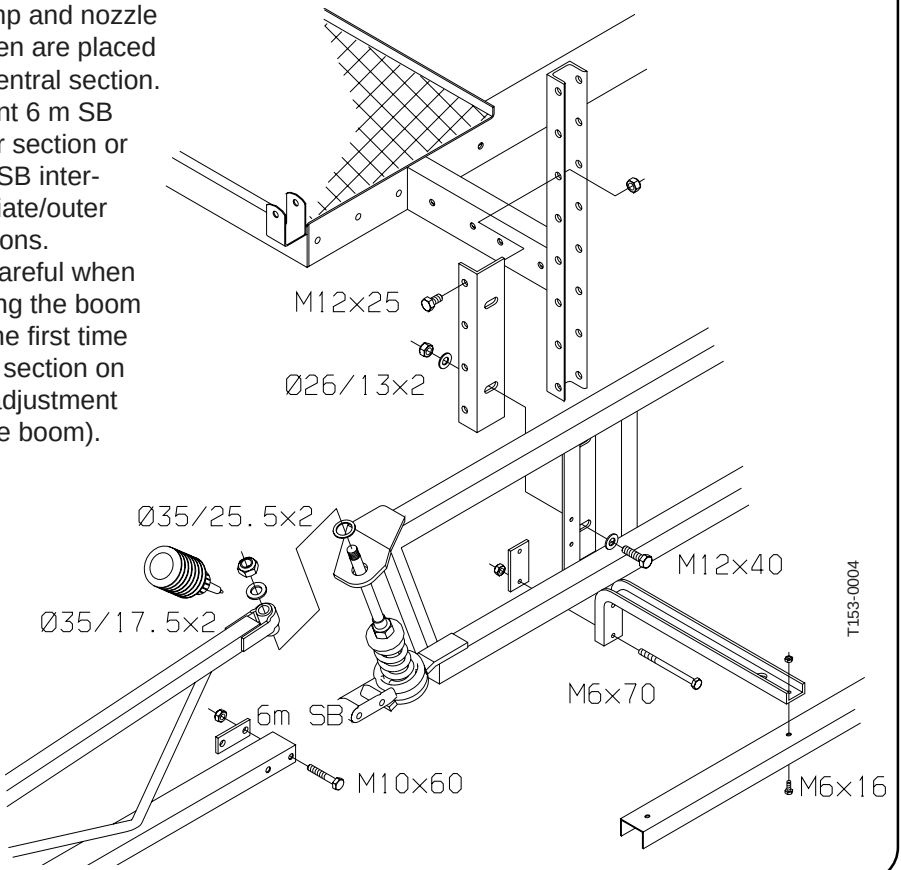

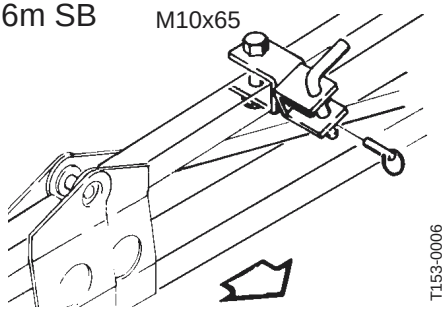

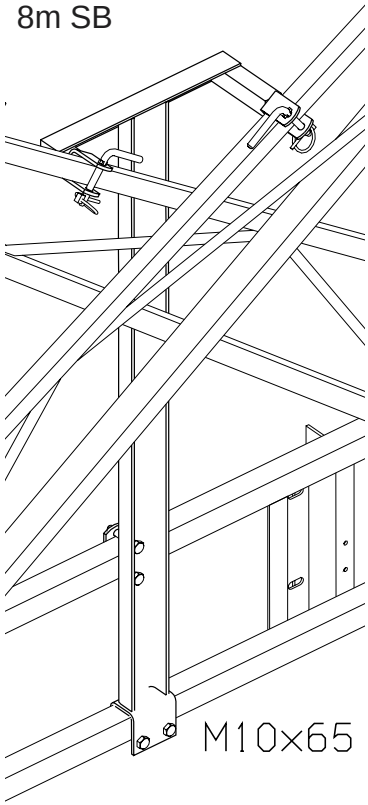

7. Tighten transport bracket of sprayer boom:
   6 m SB: First fold right outer section - fit lock.
   8 m SB: Fit transport bracket on central section.

8. Use sealing tape on pump suction and pressure fittings. Mount pulsation dampers (O-ring diameter 30/26x2).Fit bottom half of the yellow protection guard. Lubricate conical shaft, connect the transmission shaft and fit upper part of guard. Recheck the grub screw is tight after 5 min. of usage.

A. Suction from tank
B. Pressure to operating unit

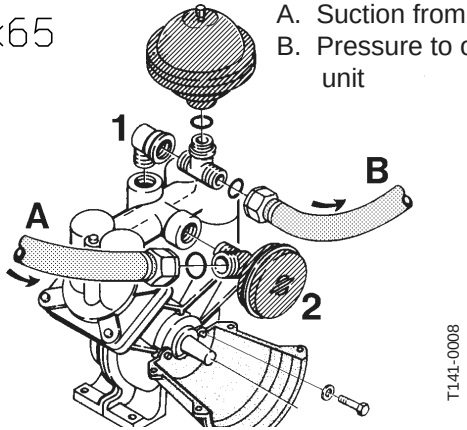

9. For model 1202 pump, use pump socket with reinforcement which must be placed outward. Tighten pump socket to central section. Fix the chain of the transmission shaft to prevent the protection tubes from rotating.

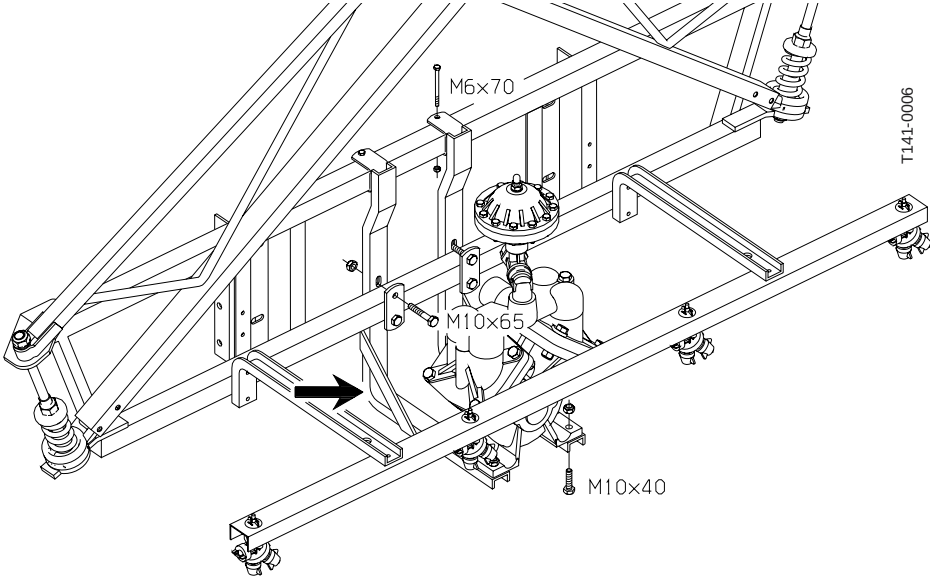

10. Nozzle tubes are supplied with one lock nozzle saddle per tube **A**. The rest can slide lengthwise **B** allowing for extension and contraction.

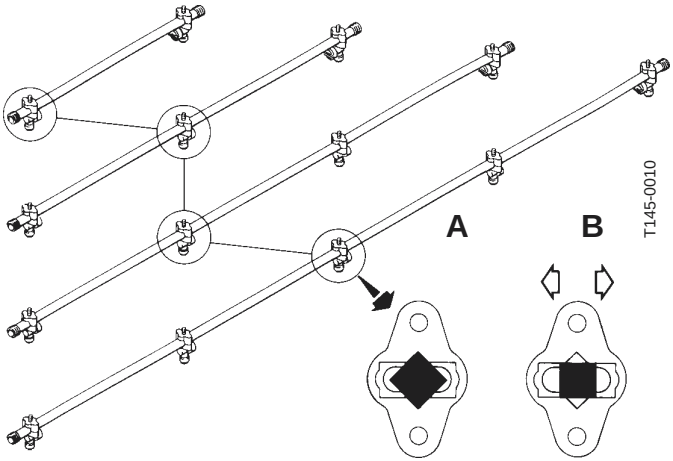

11. Tubes and hoses are connected. Fit tubes using synthetic nut.
Press down (**1**), turn (**2**). **Do not over-tighten.** Fit filter and COLOR TIPS.
REMEMBER: Lubricate O-rings before fitting.

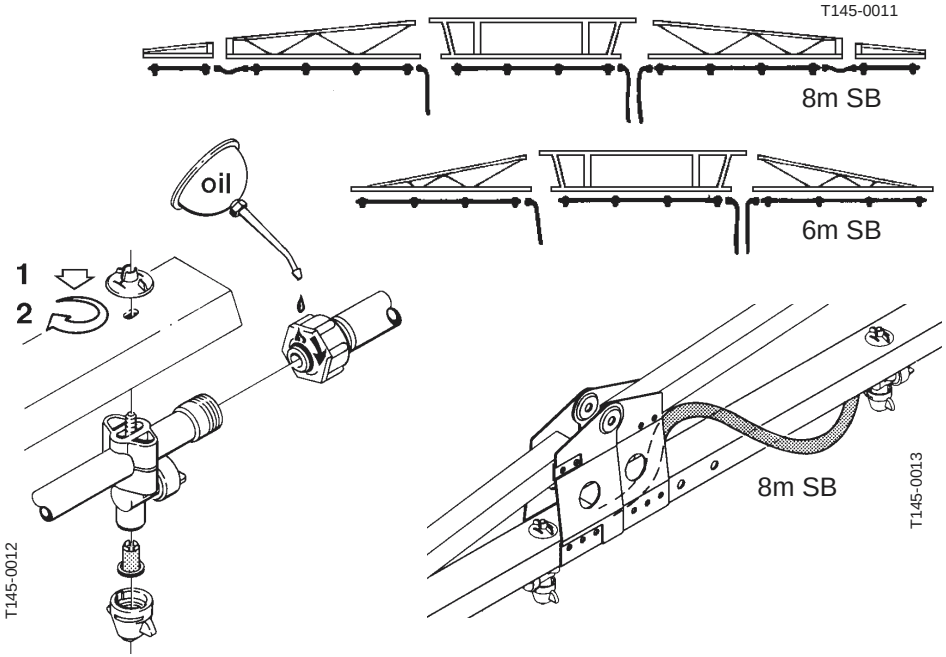

12. Adjust mounting bracket of tank frame to your tractor.
Connect the sprayer.
Shorten, if necessary, the transmission shaft.
Adjust operating unit bracket.

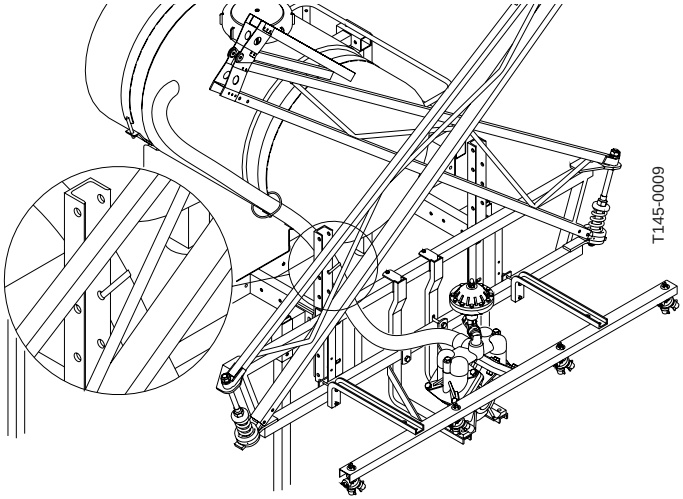

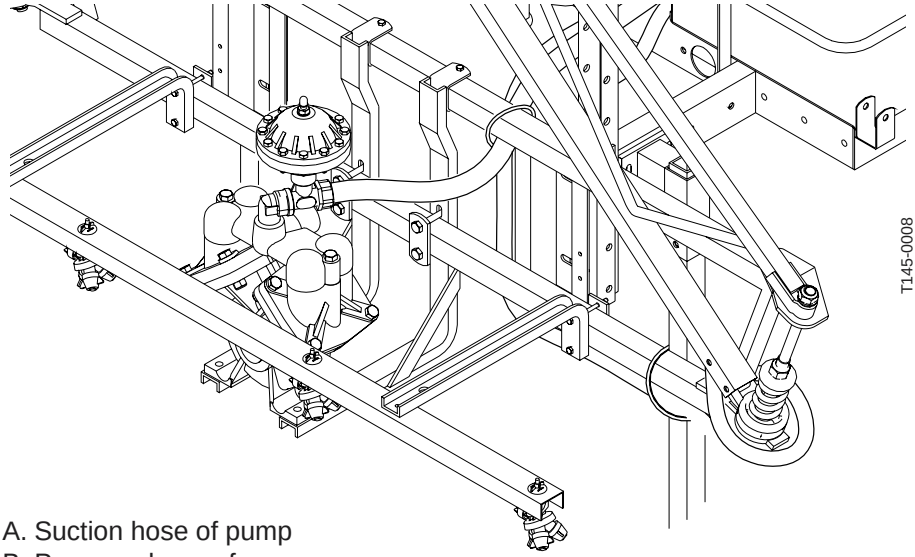

A. Suction hose of pump
B. Pressure hose of pump
C. By-pass to main ON/OFF valve
H. By-pass to HARDI-MATIC
E. By-pass for pressure equalization valves
F. Feed hoses for boom

Secure hoses with plastic straps. Check they do not foul. Shorten if necessary.
Test the sprayer with clean water and check for leaks. Tighten if necessary.

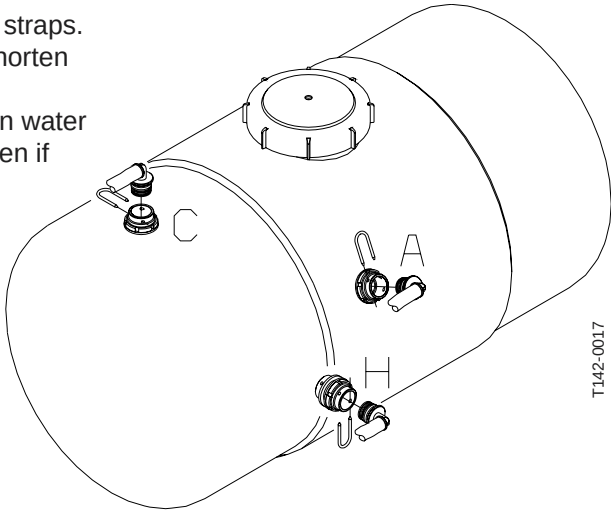

BS 800 sprayer

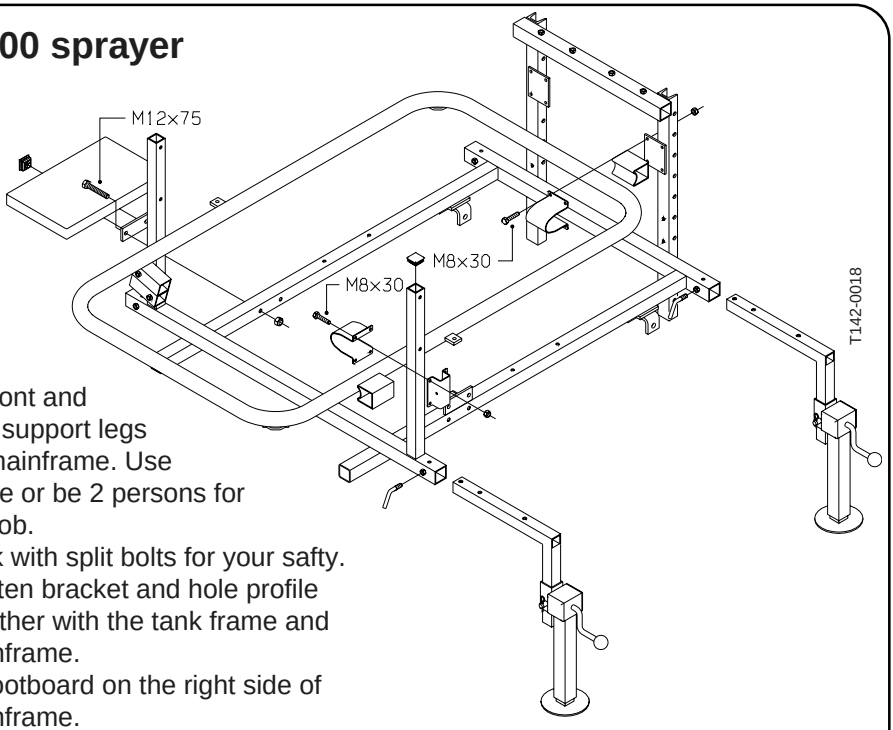

1. Fit front and rear support legs to mainframe. Use crane or be 2 persons for the job.
   Lock with split bolts for your safty.
2. Tighten bracket and hole profile together with the tank frame and mainframe.
3. Fit footboard on the right side of mainframe.

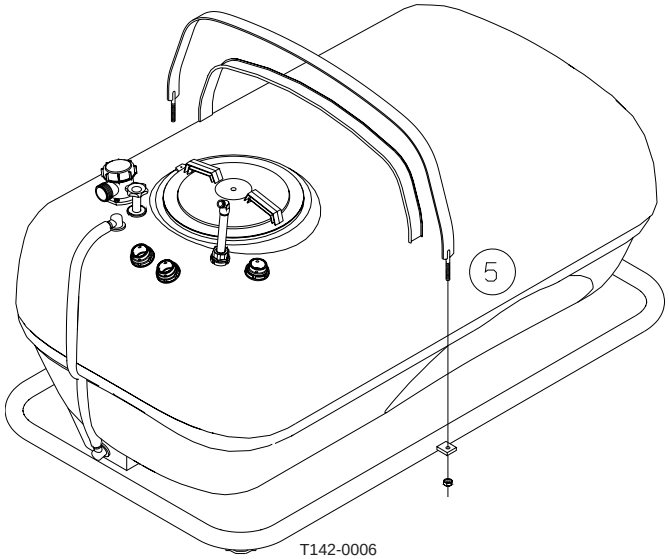

4. Fit bracket to the right front support, then fold away mechanism and operating unit arm. (If equiped fit Foam marker bracket).

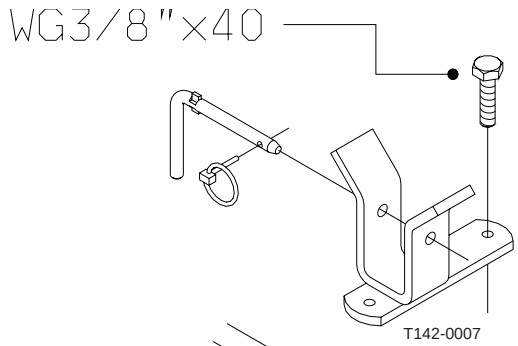

5. Fit angle brackets to frame and central section to angle brackets. Fit clamp and nozzle screen to central section. Mount intermidiate/outer sections.
Be careful when folding the boom for the first time. (See section on readjustment of the boom).

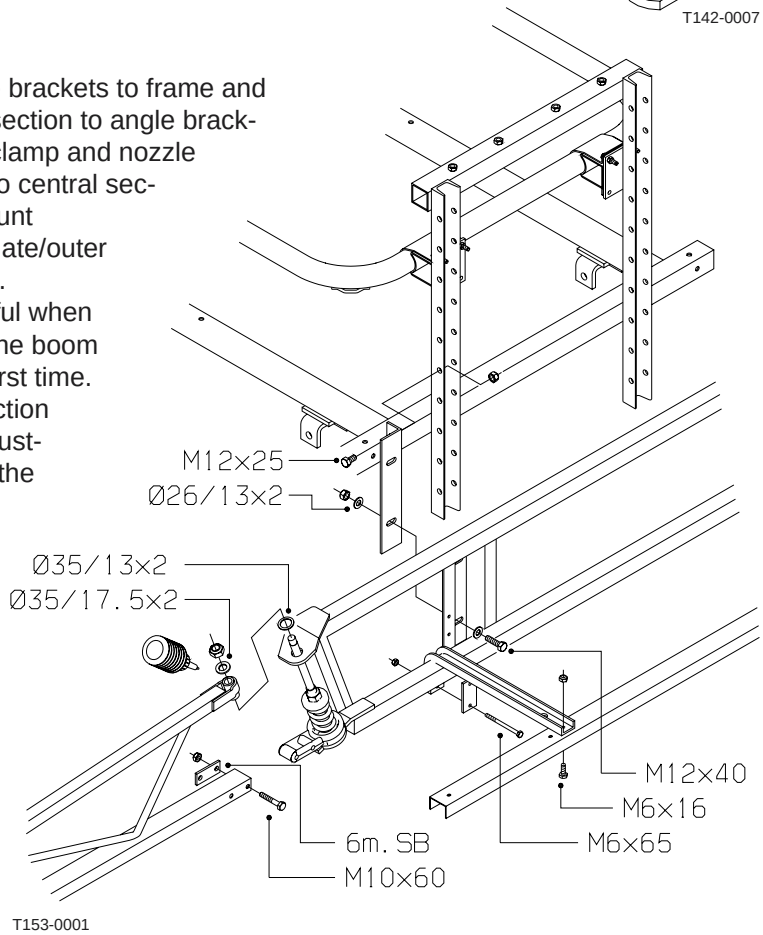

6. Tighten boom transport bracket. First fold right hand intermidiate/outer sections. Fit lock.

7. 10 m SB ONLY: Fit outer section locks.

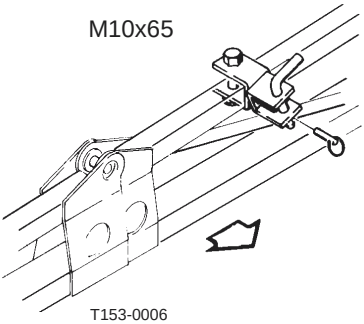

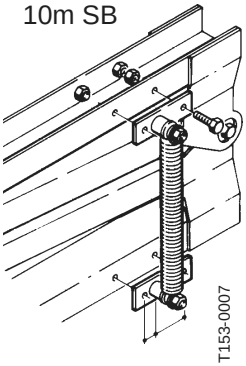

8. See **BS 300** point 8

9. Fit pump bracket to central section. Note: The reinforcement must be placed outward. Fix the chain of the transmission shaft to prevent the protection tubes from rotating.

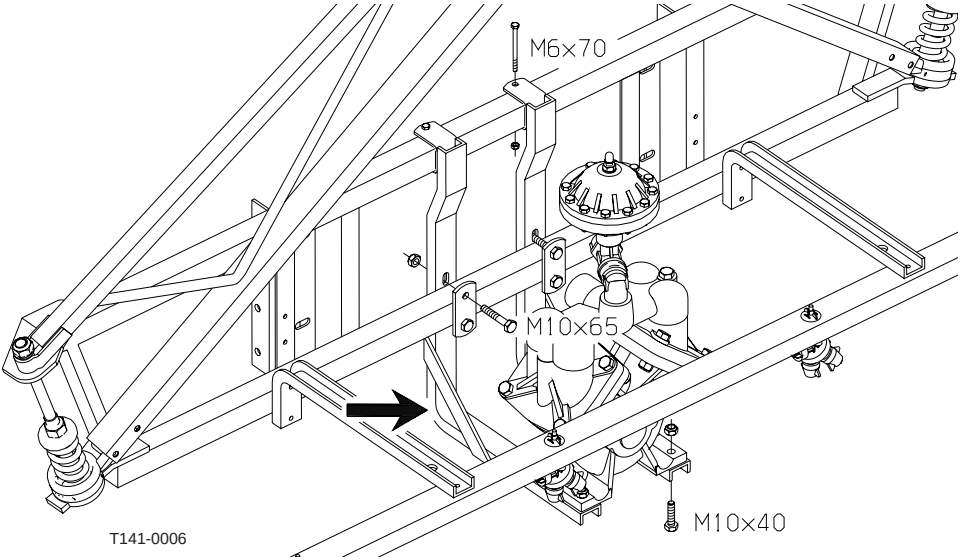

10. See **BS 300** punkt 10 and 11

11. Close main ON/OFF handle (**1B**) on the operating unit. Put the ball into the handle and turn it to working position, Whereby the ball dissapears into the operating unit. Fit ball seat on distribution valves which are tightened to the main ON/OFF. part. Use screws and plastic nuts to fit the operating unit.

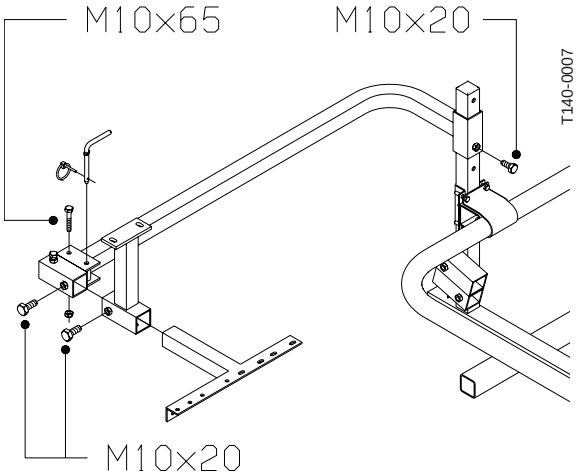

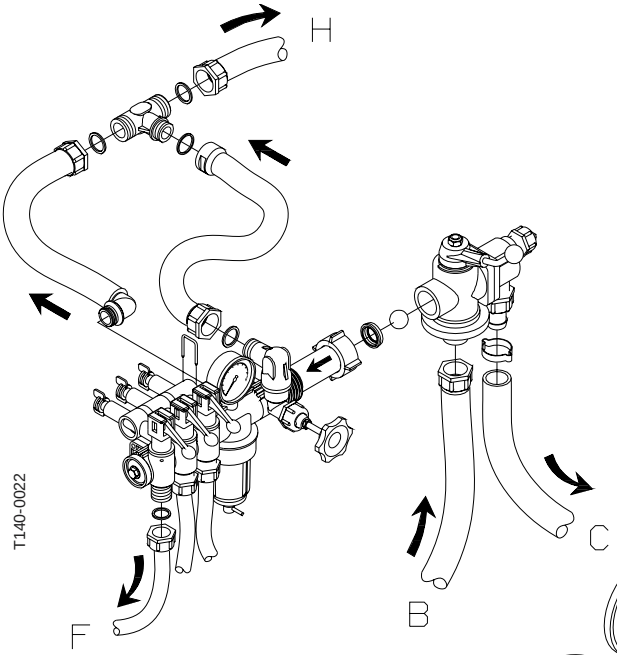

12. Use sealing tape on the pressure gauge. See back of pressure gauge. Pierce casing and fit gauge.
Do not tighten by twisting the gauge casing - use spanner. Do not overtighten.

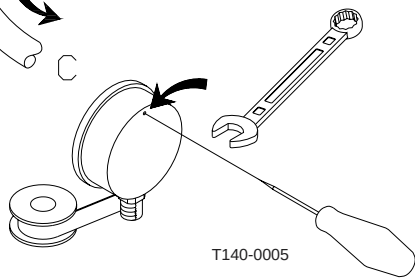

13. Fit hoses to operating unit and tank.

A Pump suction hose.
B Pump pressure hose.
C By-pass to main ON/OFF handle.
D Pressure agitation.
E By-pass to pressure equalization.
F Feed hoses to boom
H By-pass to HARDI MATIC

Secure hoses with plastic straps.
Check that hoses do not foul in spraying or transport position.

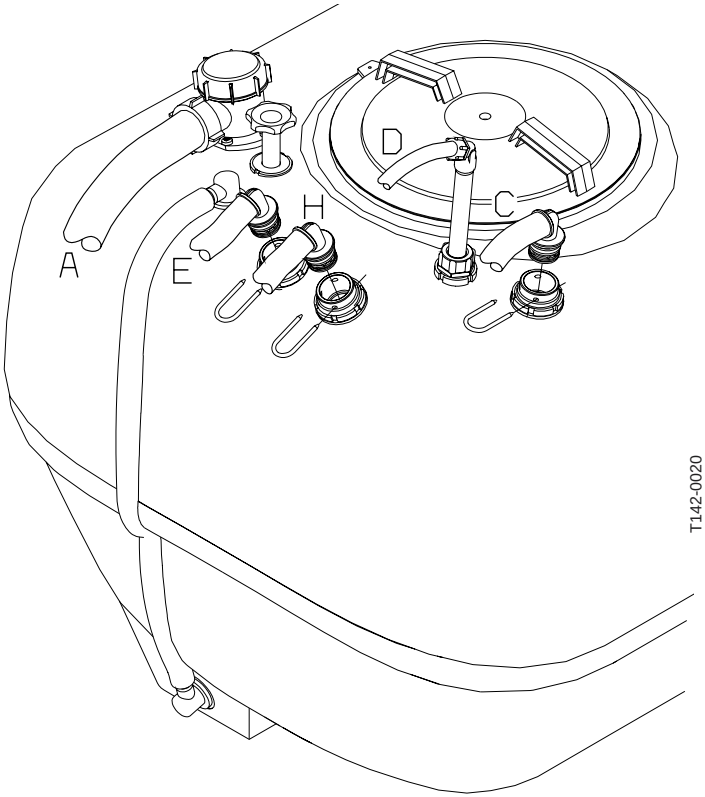

14. Fit mounting bracket to frame of vehicle. Connect sprayer to vehicle. Shorten if necessary, the transmission shaft. See instruction book on connecting the sprayer.

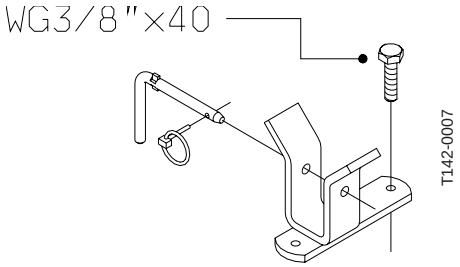

15. The sprayer is tested with water at high pressure in order to reveal possible leakages. Leakages must be sealed.

    Optional extras:

16. Bracket for hose reel is fitted on the left side of the rear tank-frame support.

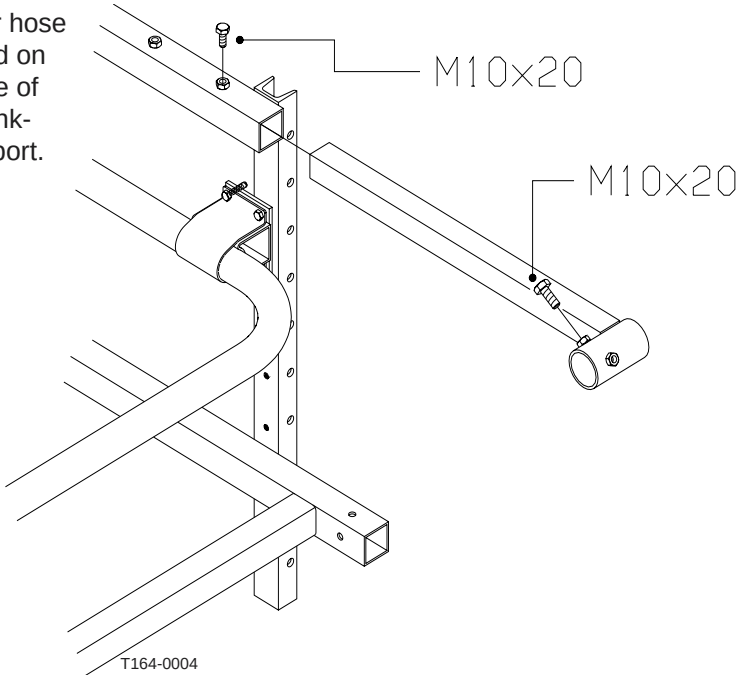

17. The HARDI FILLER is fitted on the left side of the mainframe.

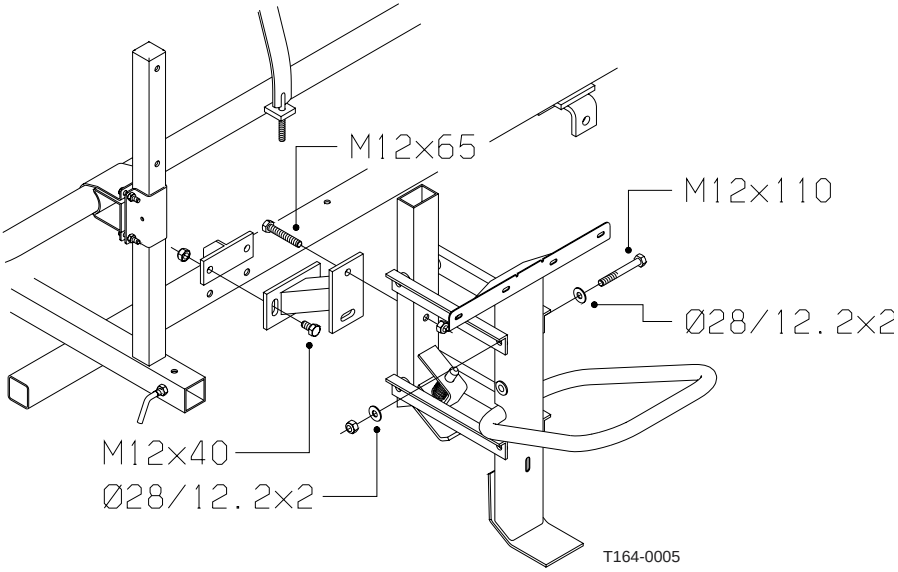

18. Bracket for 15L clean water tank is to be fitted on the left side of the front tankframe support.

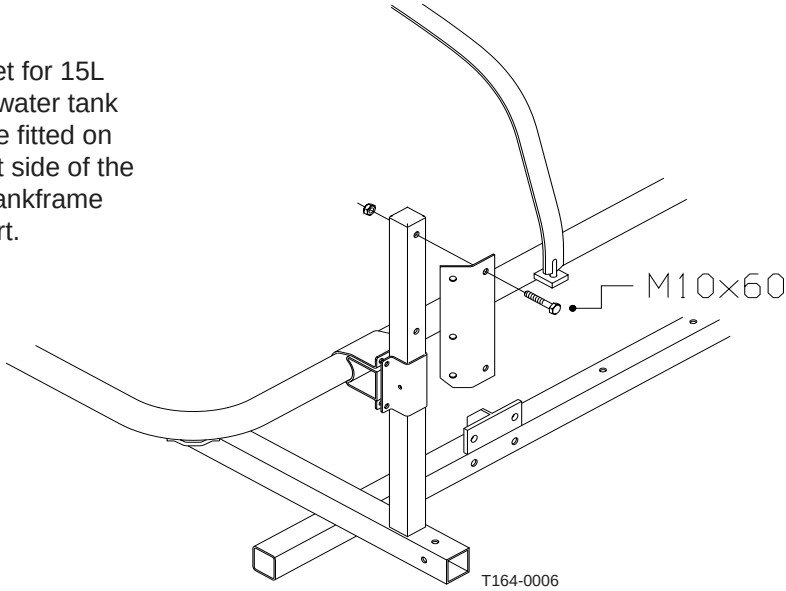

19. Bracket for Foam-marker tanks is to be fitted on the right side of the rear tankframe support.

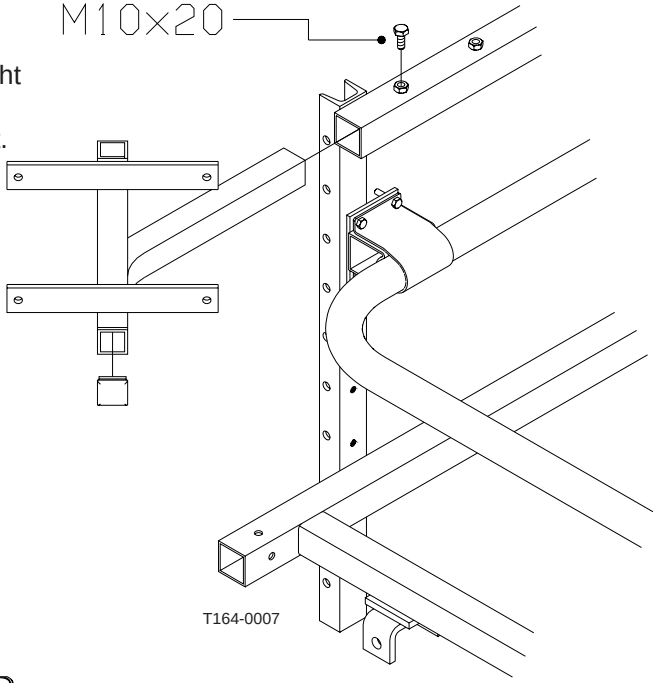

20. HARDI® Nozzle Booklet. The self cleaning filter is fitted to the operating unit arm using the u-shaped clamp.

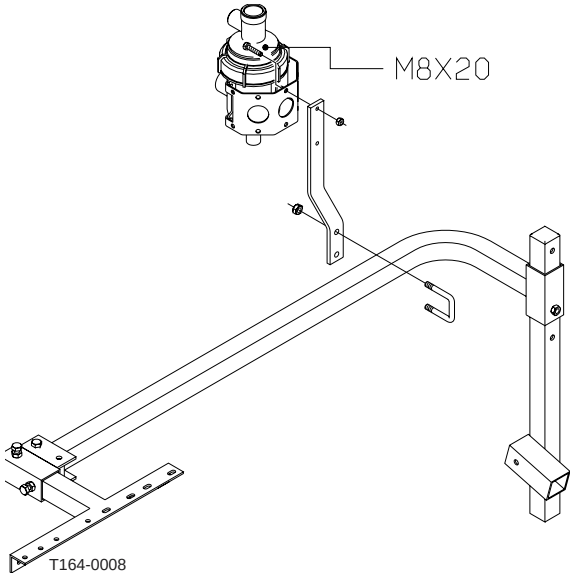

HR 800 sprayer

1. Fit wheels and nose wheel on frame. Fit hole profile 40 x 40 mm (length 2.2 m) on frame with U-bracket. Place rear **A** and front **B** trestles and then pump bracket **C**.

2. Tighten bracket and hole profile **D** together with tank frame and trestle. The position of tank/trestles can be changed according to wish - tighten U-brackets **E** on frame.

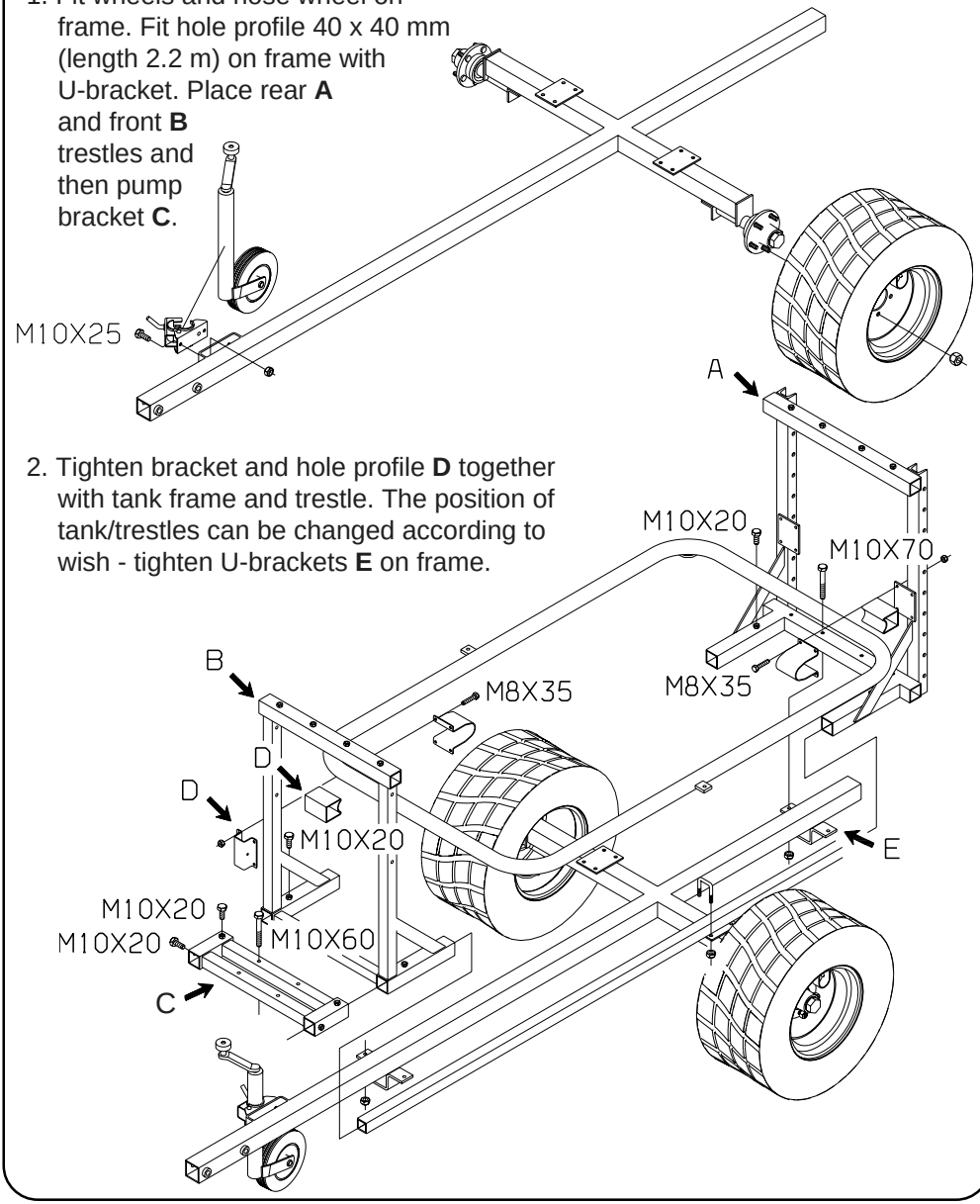

3. See **BS 800** point 6.

4. See **BS 800** point 7 and 8.

5. Place tubes and hoses. Do not forget to lubricate. Fit tubes with synthetic nut. Press 1 down and turn 2. Do not overtighten. Fit filter and COLOR TIPS.

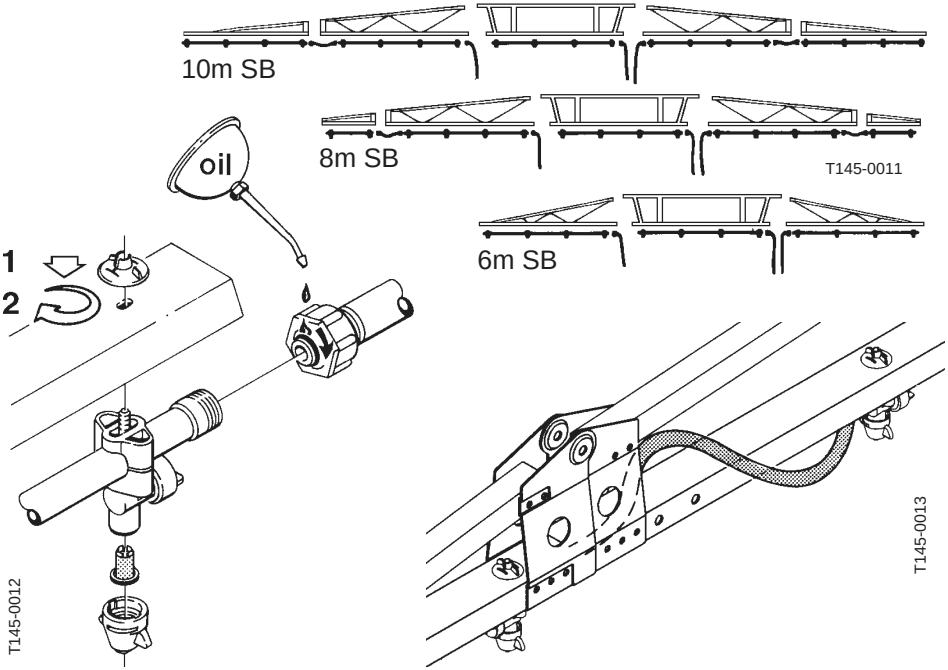

6. See **BS 300** point 8.

7. See **BS 800** point 12,13 and 14.

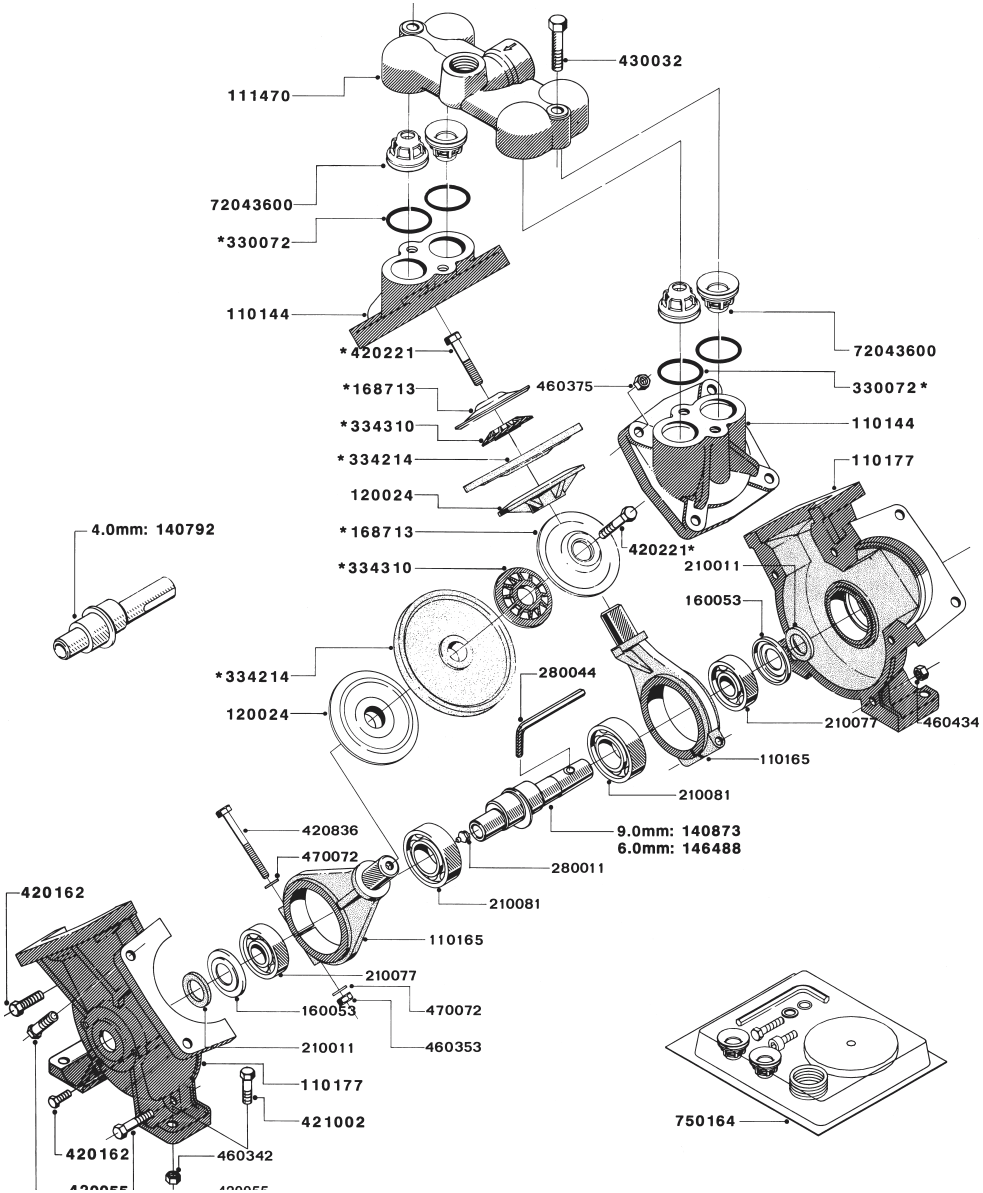
430032
111470
72043600
*330072
110144
*420221
*168713
460375
*334310
*334214
120024
*168713
420221*
*334310
4.0mm: 140792
72043600
330072*
110144
110177
210011
160053
*334214
280044
120024
210077
460434
110165
210081
420836
470072
9.0mm: 140873
6.0mm: 146488
280011
420162
210081
110165
210077
160053
470072
460353
210011
110177
421002
420162
460342
750164

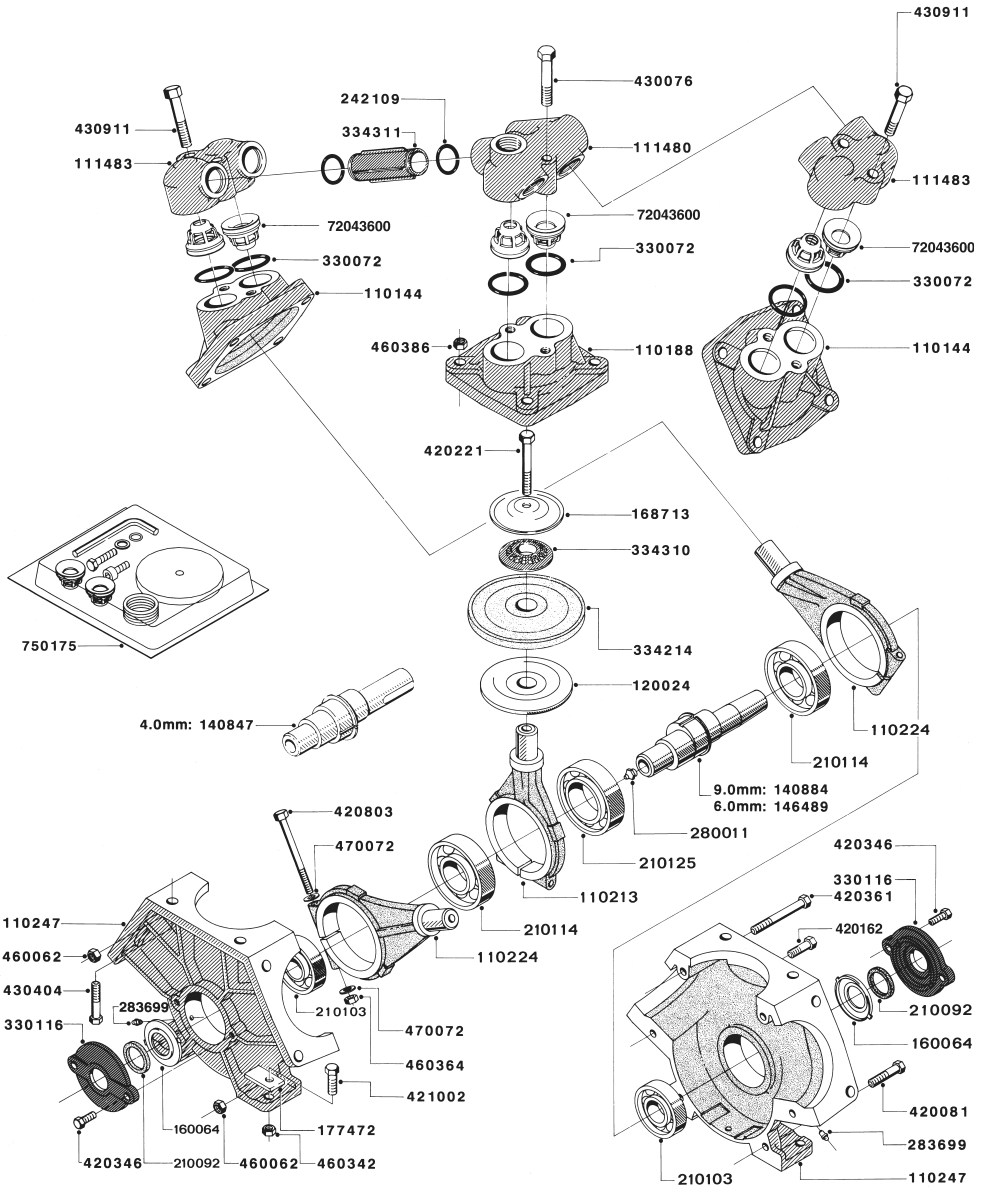

A12 1302/foot

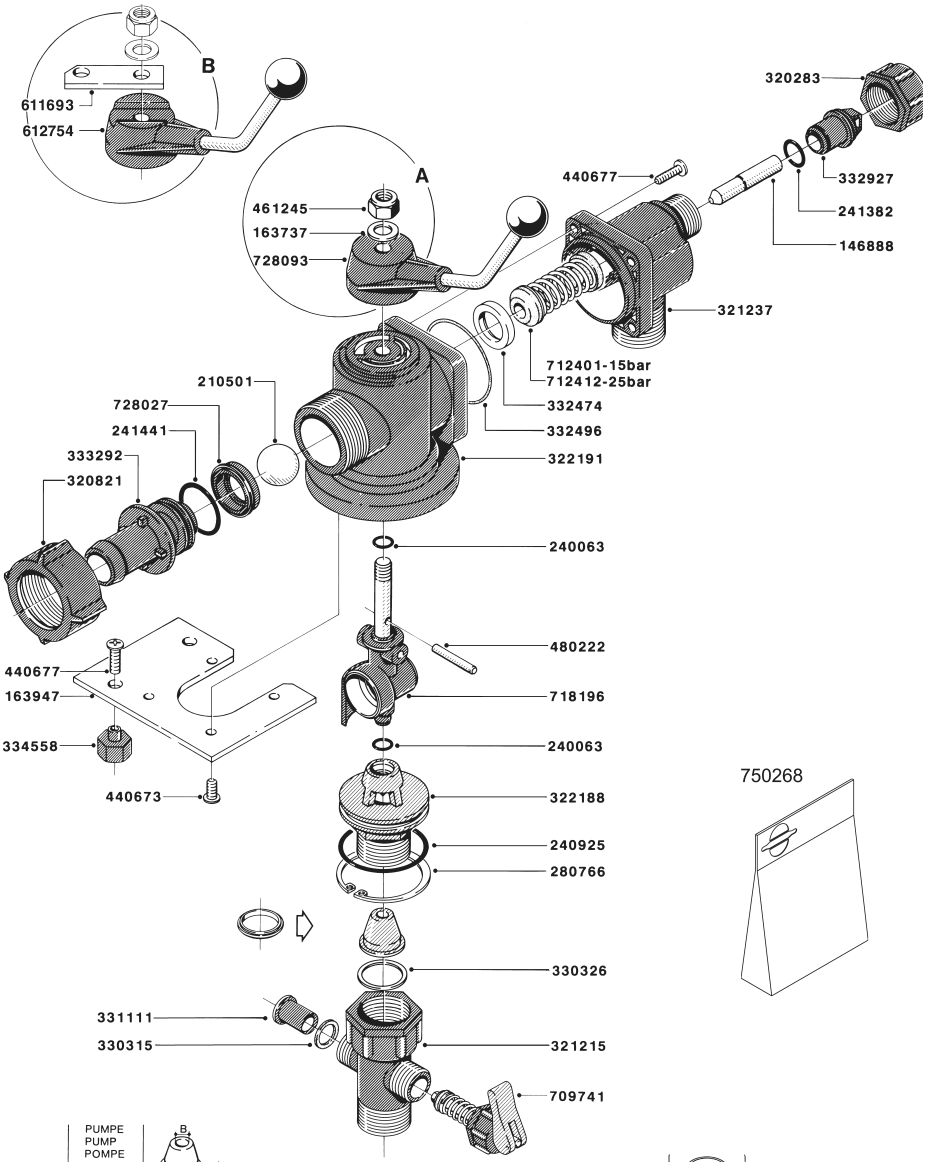

PUMPE PUMP POMPE PUMPE BOMBA	B	B mm	FARVE	COLOUR	COULEUR	FARBE	COLOR	
600	333314	5,2	BLÅ	BLUE	BLEU	BLAU	AZUL	
1202	333325	7,3	RØD	RED	ROUGE	ROT	ROJO	
1302	333336	10,0	HVID	WHITE	BLANC	WEISS	BLANCO	
361 HT	333347	9,6	ORANGE	ORANGE	ORANGE	ORANGE	ANARANJADO	
361	333351	12,5	SORT	BLACK	NOIR	SCHWARZ	NEGRO	
320 HT	333362	6	GRØN	GREEN	VERT	GRÜN	VERDE	
462								145305

Unit BK 180K (92)

B9

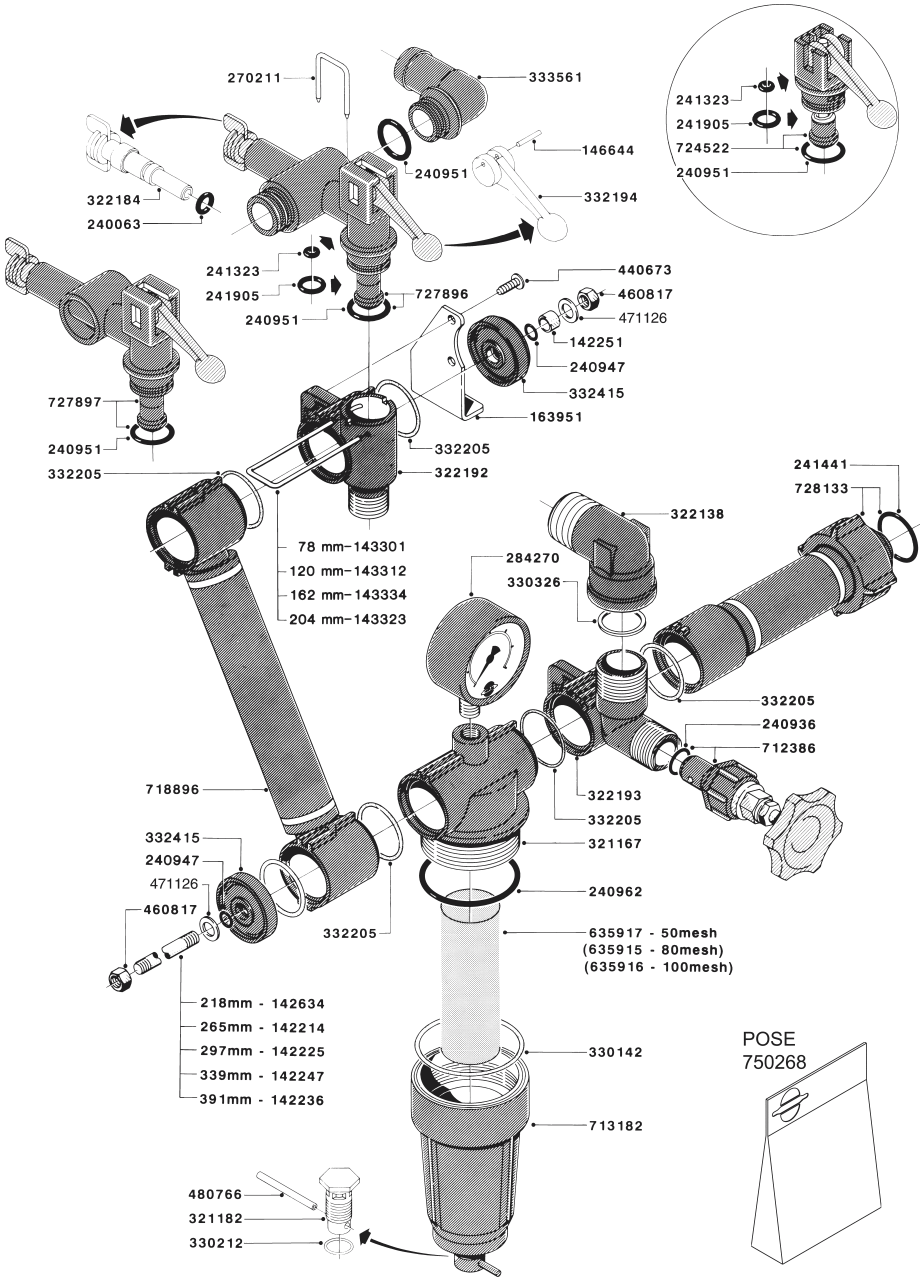

B10 Distributor BK180K (92)

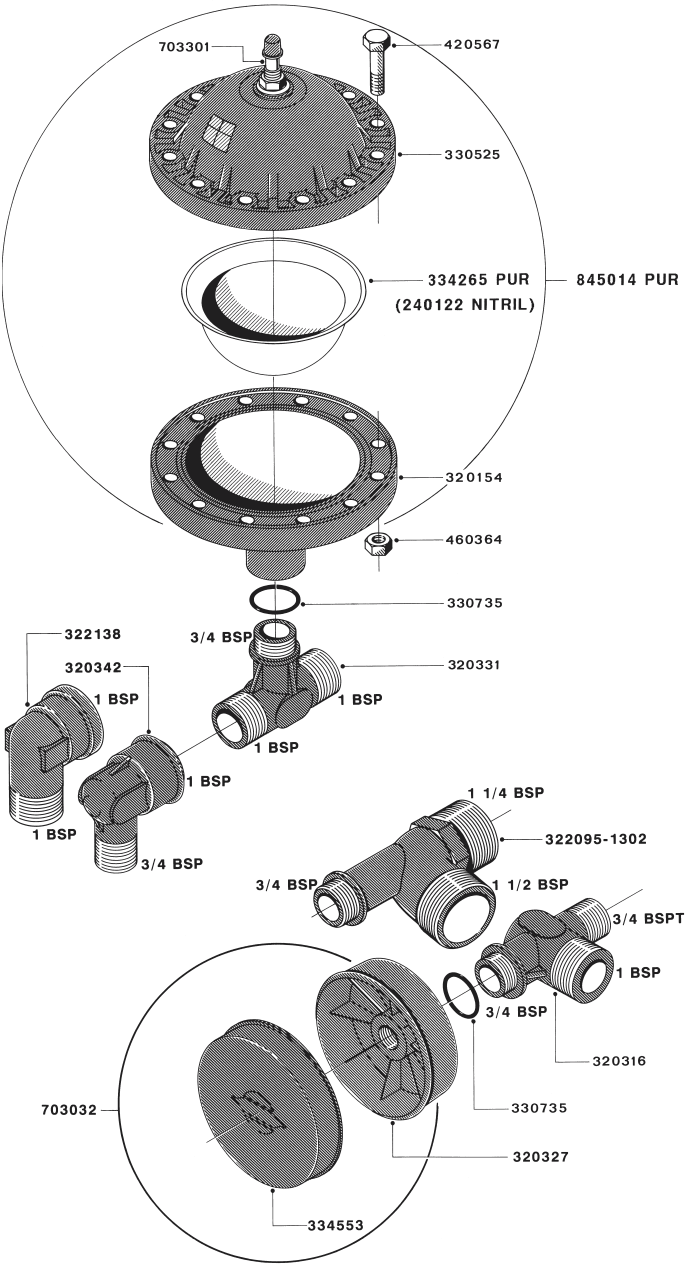

Damper HJ73 **B300**

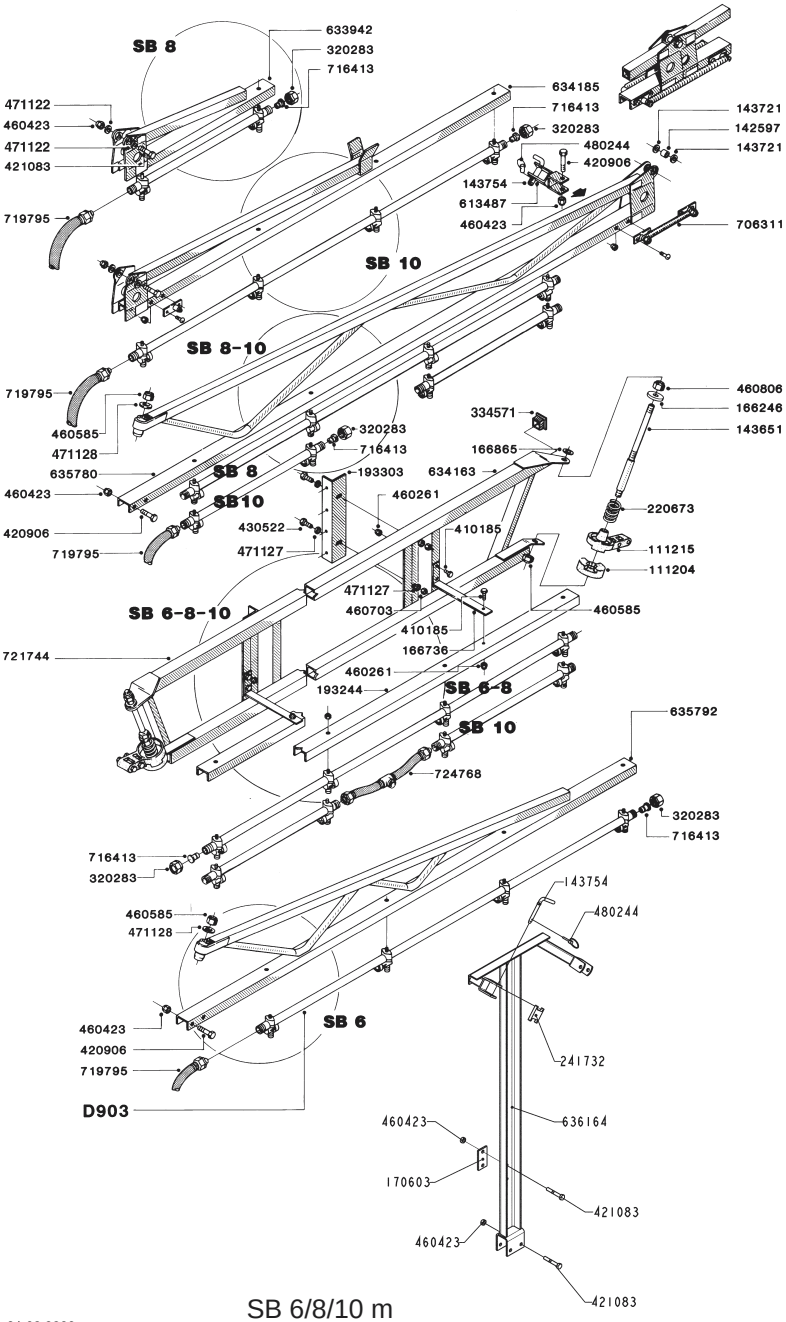
SB 8
633942
320283
716413
471122
460423
471122
421083
719795
634185
716413
320283
480244
420906
143754
613487
460423
143721
142597
143721
706311
SB 10
SB 8-10
719795
460585
471128
635780
460423
420906
719795
320283
716413
193303
SB 8
SB10
460261
430522
471127
410185
334571
166865
634163
460806
166246
143651
220673
111215
111204
SB 6-8-10
721744
471127
460703
410185
166736
460261
193244
460585
SB 6-8
SB 10
635792
724768
320283
716413
716413
320283
143754
480244
460585
471128
460423
420906
719795
SB 6
D903
241732
460423
636164
170603
421083
460423
421083

D2 SB 6/8/10 m

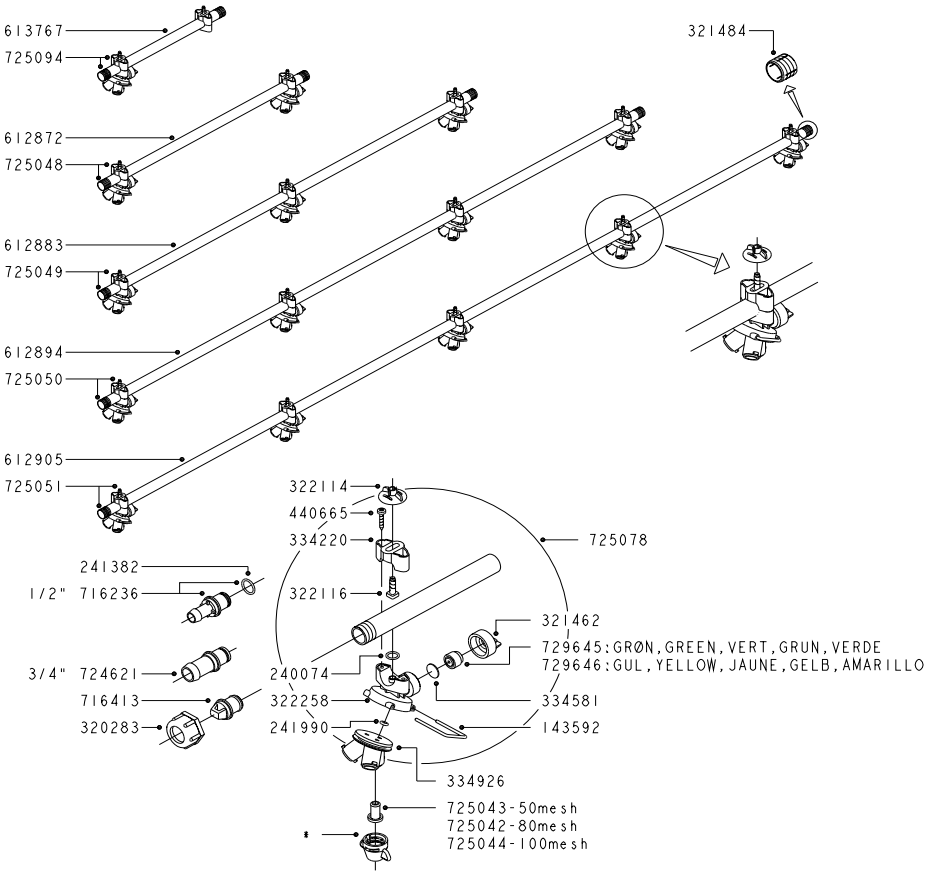

*		FARVE	COLOUR	COULEUR	FARBE	COLOR
371469	S4110-08	VIOLET	VIOLET	VIOLET	VIOLETT	VIOLETA
371470	S4110-10	BRUN	BROWN	BRUN	BRAUN	MARRON
371471	S4110-12	GUL	YELLOW	JAUNE	GELB	AMARILLO
371472	S4110-14	ORANGE	ORANGE	ORANGE	ORANGE	ANARANJADO
371473	S4110-16	RØD	RED	ROUGE	ROT	ROJO
371474	S4110-18	HVID	WHITE	BLANC	WEISS	BLANCO
371475	S4110-20	GRØN	GREEN	VERT	GRUN	VERDE
371476	S4110-24	TURKIS	TURQUOISE BLUE	BLEU TURQUOISE	TURKIS	AZUL TURQUI
371477	S4110-30	BLÅ	BLUE	BLEU	BLAU	AZUL
371478	S4110-36	GRÅ	GREY	GRIS	GRAU	GRIS
371479	S4110-44	ELFENBEN	IVORY	IVOIRE	ELFENBEIN	MARFIL

Boom tube TRIPLET SNAP-FIT **D904**

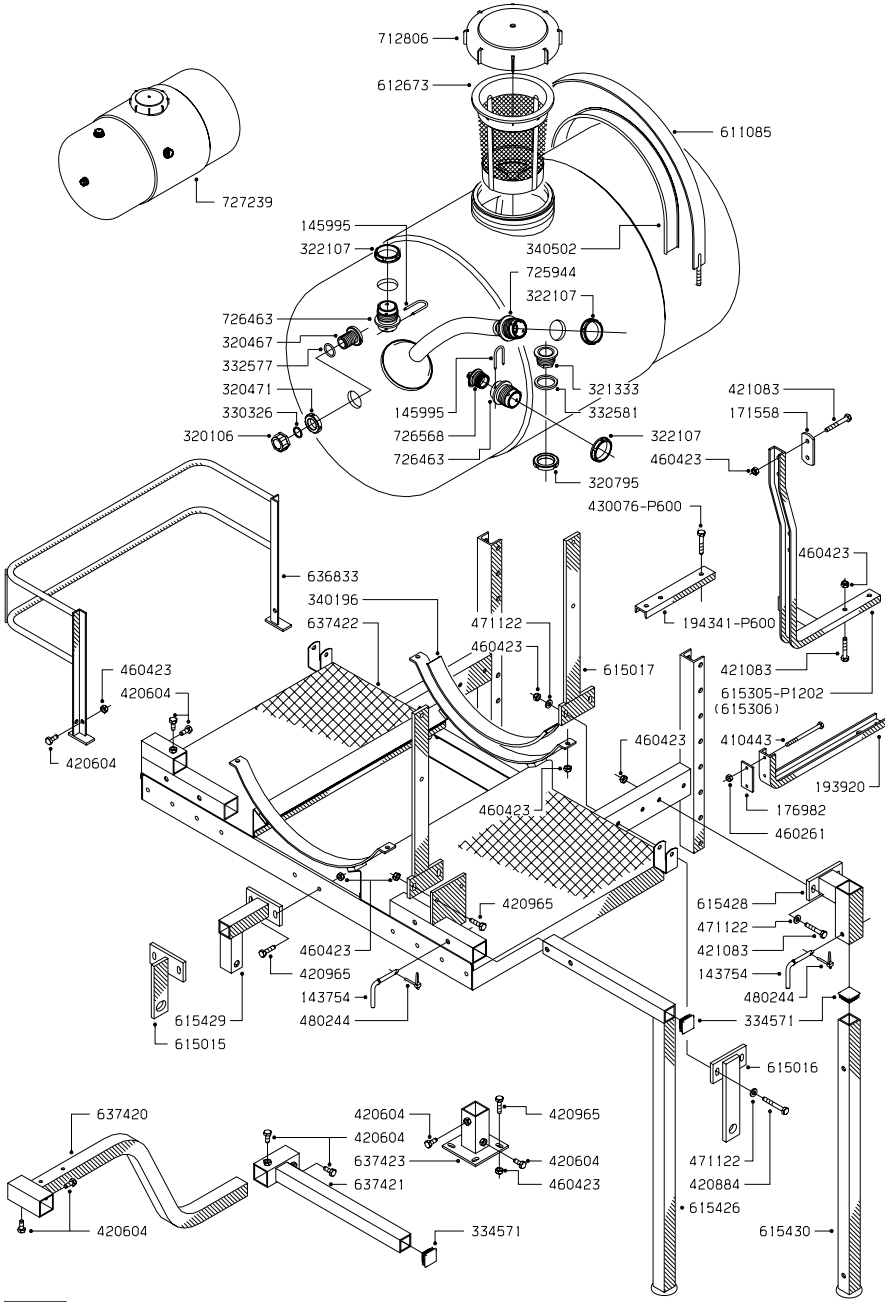
712806
612673
611085
727239
145995
322107
340502
725944
322107
726463
320467
332577
320471
330326
320106
145995
726568
726463
321333
332581
322107
320795
421083
171558
460423
430076-P600
460423
194341-P600
636833
340196
637422
471122
460423
615017
421083
615305-P1202
(615306)
460423
420604
420604
460423
410443
193920
176982
460261
460423
420965
615428
471122
421083
143754
480244
334571
460423
420965
143754
480244
615429
615015
615016
471122
420884
615426
615430
637420
420604
420604
637423
637421
420965
420604
460423
334571

H106 PS 300

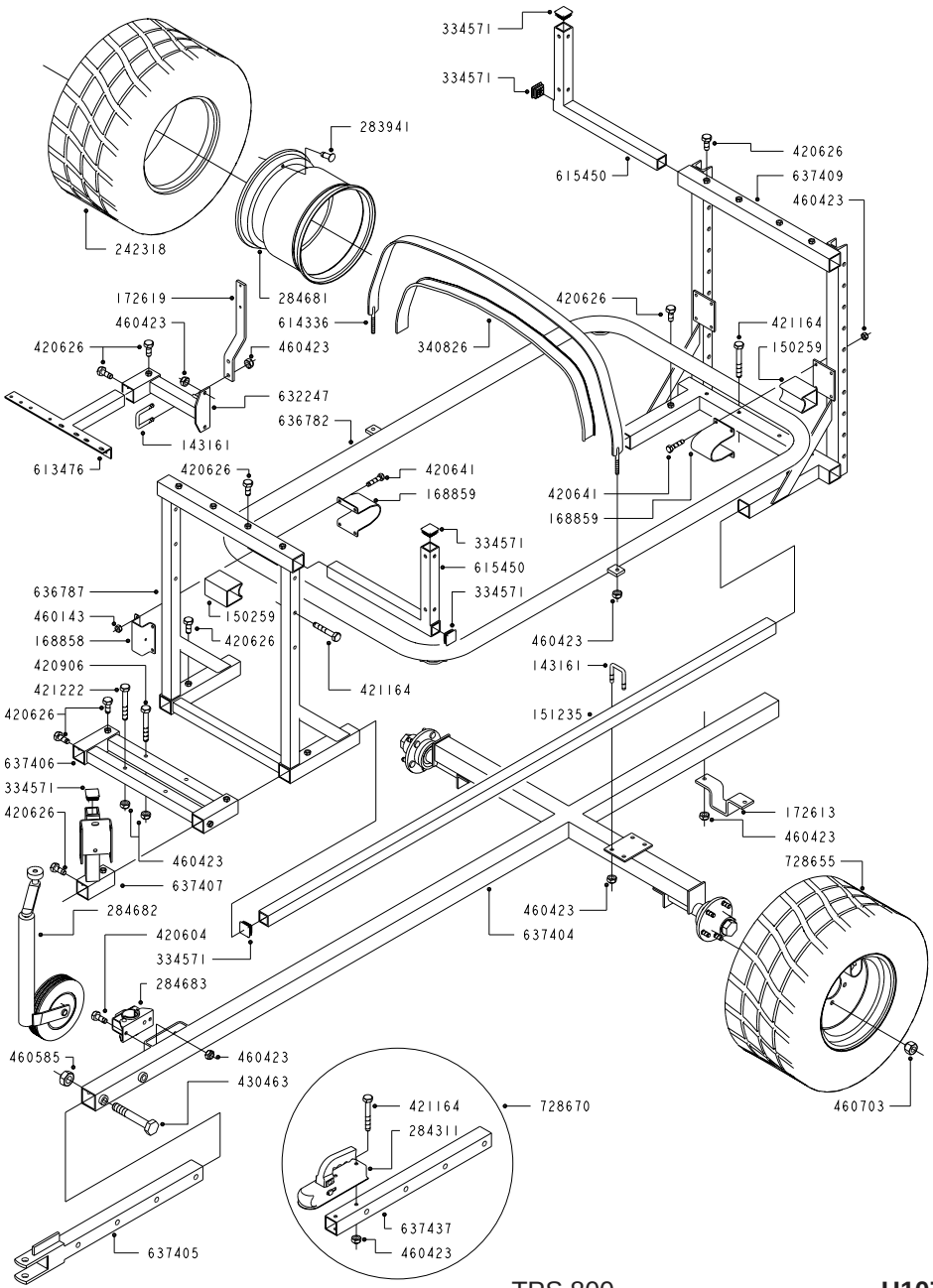
334571
334571
283941
420626
637409
460423
615450
242318
284681
172619
460423
614336
420626
421164
150259
420626
460423
340826
632247
636782
143161
613476
420626
420641
168859
420641
168859
334571
615450
334571
636787
150259
460143
420626
168858
420906
421222
421164
460423
143161
151235
420626
637406
334571
420626
460423
637407
172613
460423
728655
284682
420604
334571
284683
460423
637404
460585
460423
430463
421164
728670
284311
637437
460423
637405
460703

TPS 800 **H107**

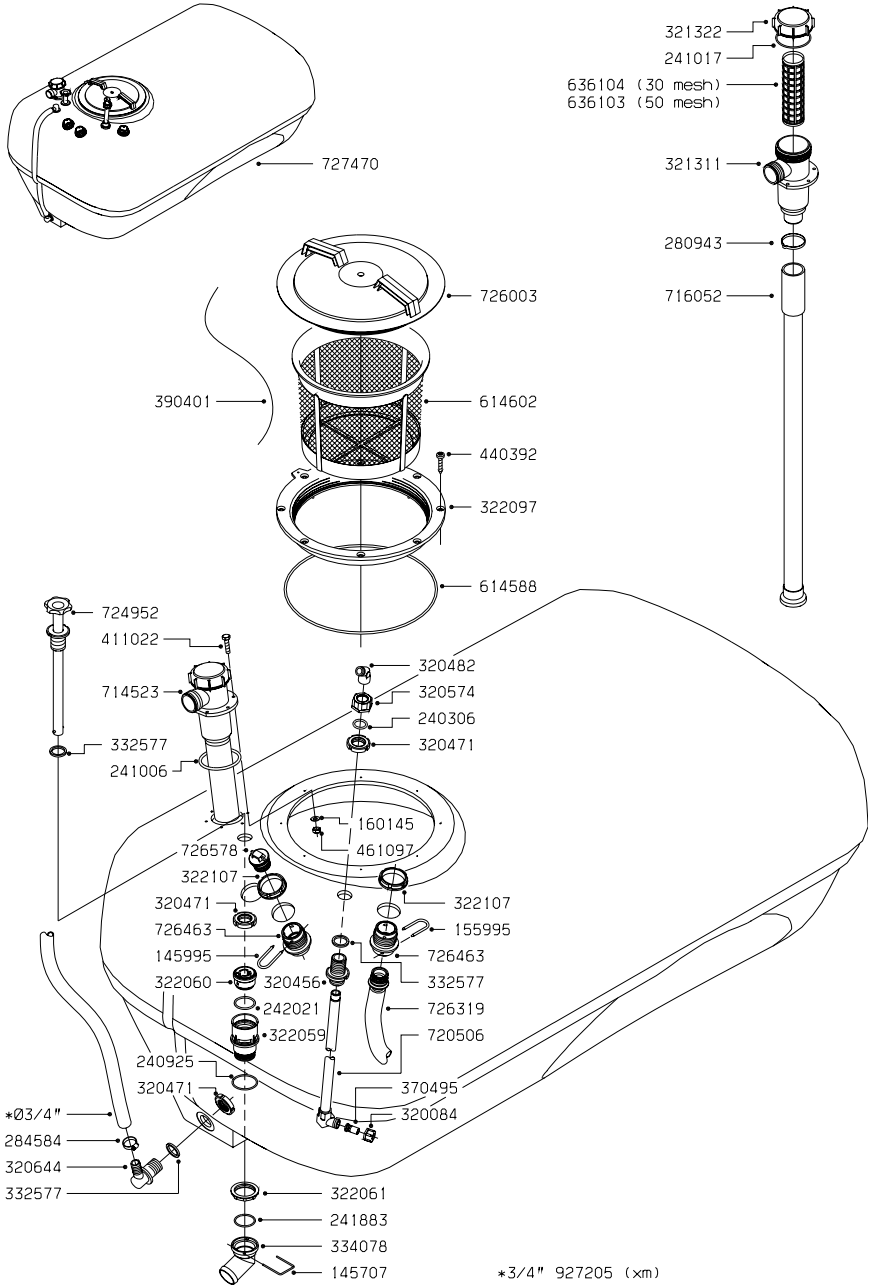

H108 PU/TPS 800

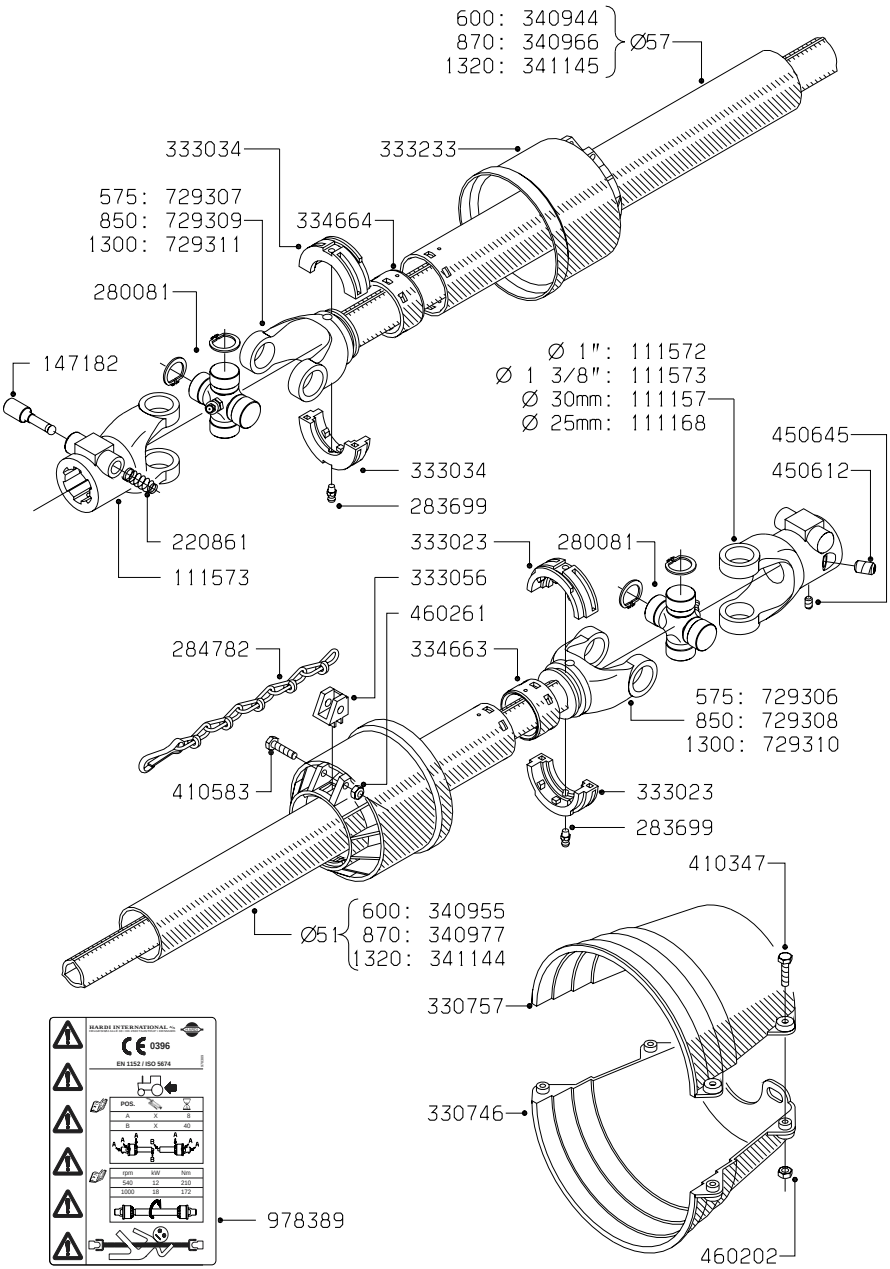

Shaft (94)

K604